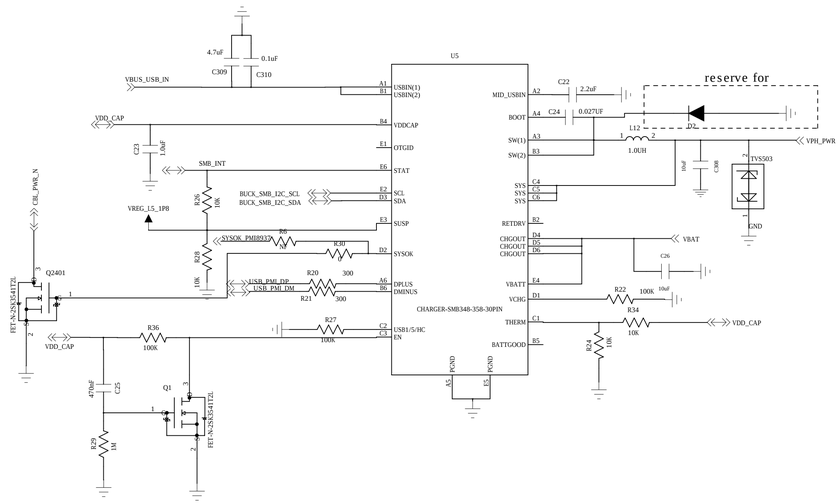

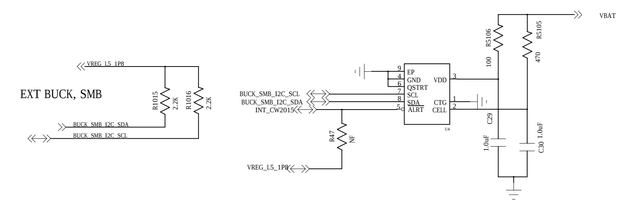

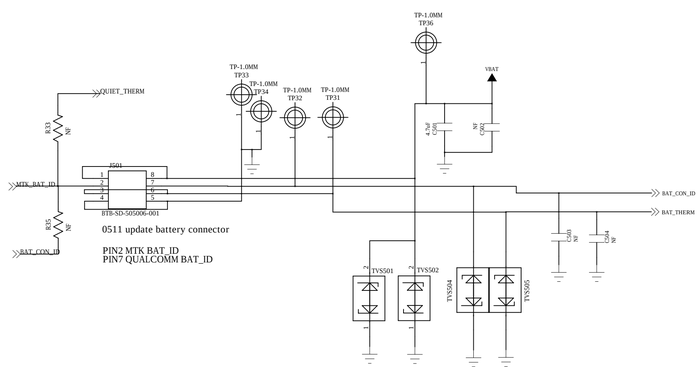

BATID Resistor Pull down to GND in BAT Module.
BAT_THERM NTC(68K B=4250) Pull down to GND in BAT Module.

BATTERY CONNECTOR

PMI8937 CHARGER

Title
Size
Sheet
Name
Rev
Date:
Sheet of

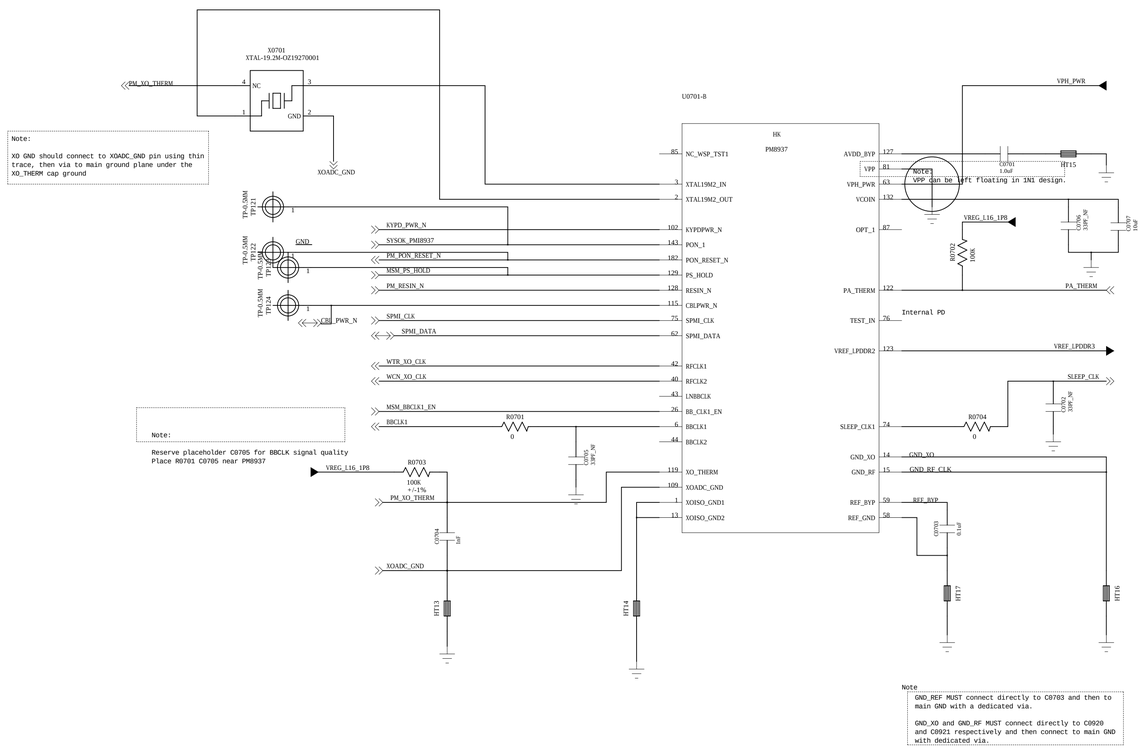

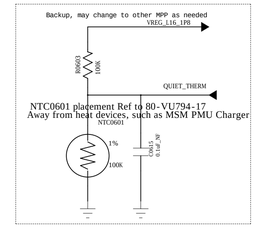

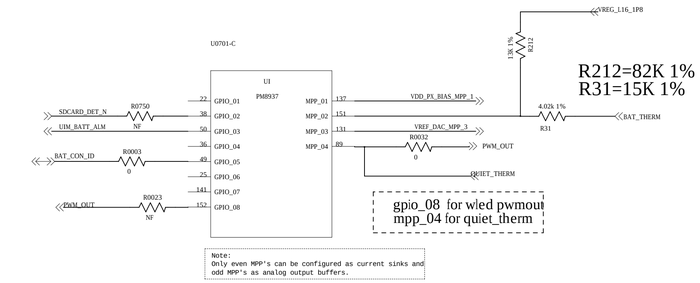

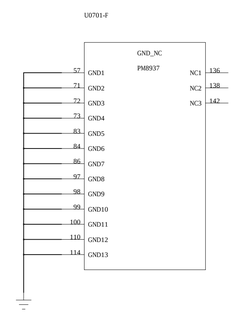

PM8937 Control and MPP/Clock

QUALCOMM Technologies, Inc.
5775 Morehouse Drive
San Diego, CA 92121-1714
U.S.A.

Title

Size | Name | Rev

Date: | Sheet of

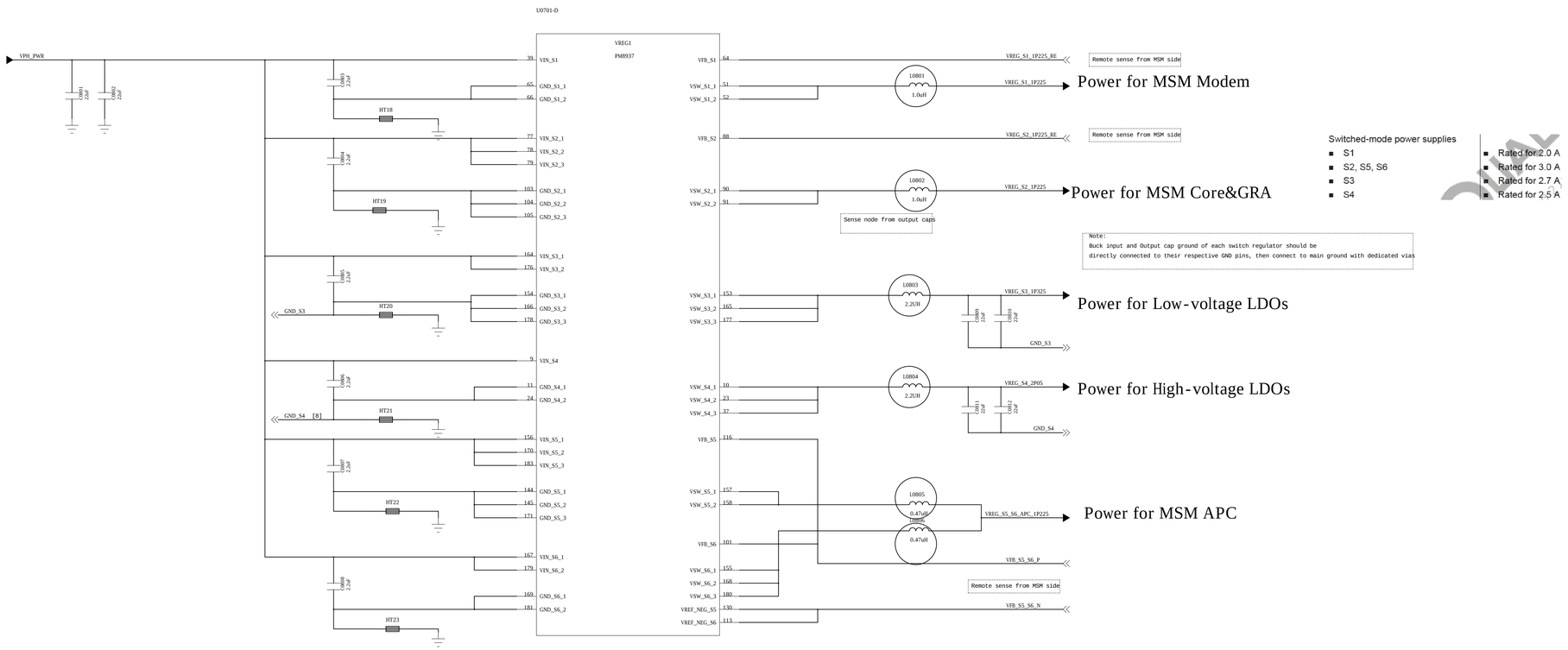

PM8937 Buck converter

QUALCOMM Technologies, Inc.
5775 Morehouse Drive
San Diego, CA 92121-1714
U.S.A.

Title

Size | Name | Rev

Date: | Sheet of

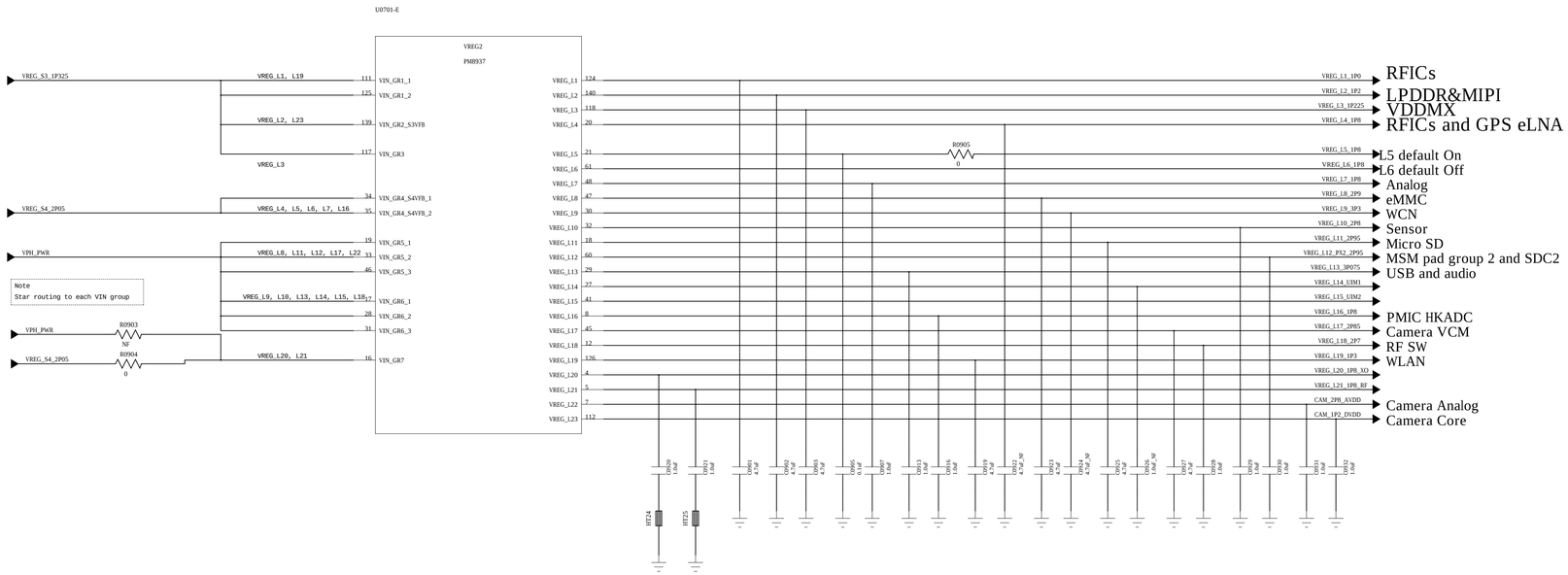

PSEUDO CAPLESS LDOs

L4*, L6, L8*, L9*, L10, L11*, L12, L14, L15, L17*, L18, L22, L23

L4*, L8*, L9*, L11*, L17*, still need validation as Pseudo-capless

L5, L7, L13, L16 have internal PMIC Loads and require local CAPs.

PM8937 LDO circuits

QUALCOMM Technologies, Inc.
5775 Morehouse Drive
San Diego, CA 92121-1714
U.S.A.

Title

Size | Name | Rev

Date: | Sheet | of

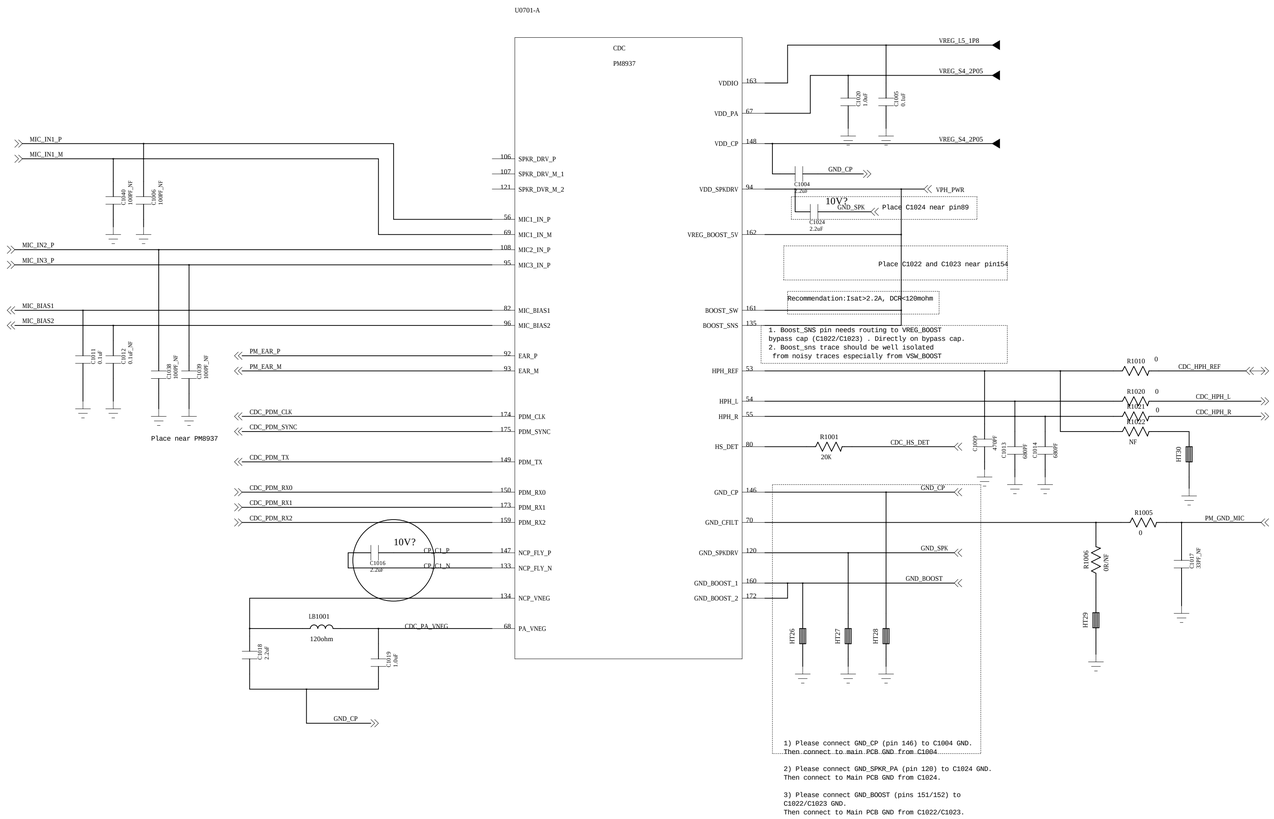

PM8937 Codec

QUALCOMM Technologies, Inc.
5775 Morehouse Drive
San Diego, CA 92121-1714
U.S.A.

Title

Size | Name | Rev

Date: | Sheet of

Note: WCSS_XO signal required only for 5GHZ.
When using WCN3615 connect pin BD13 to GND.

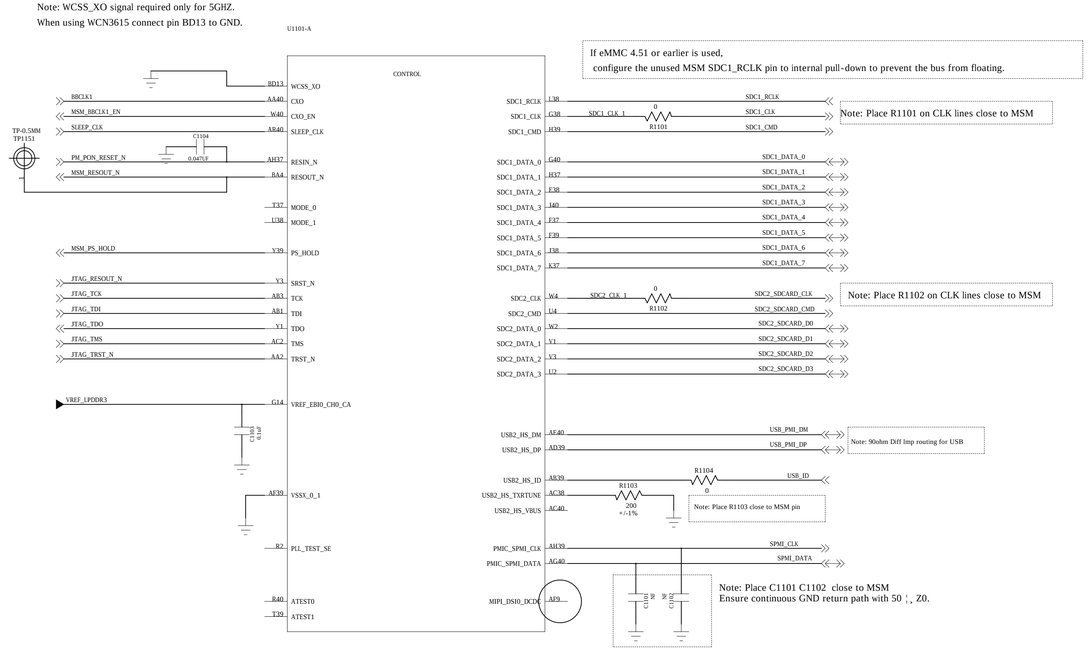

DC-DC mode ¨C For better power ~3 mA lower

MSM8937 Control

QUALCOMM Technologies, Inc.
5775 Morehouse Drive
San Diego, CA 92121-1714
U.S.A.

Title

Size | Name | Rev

Date: | Sheet of

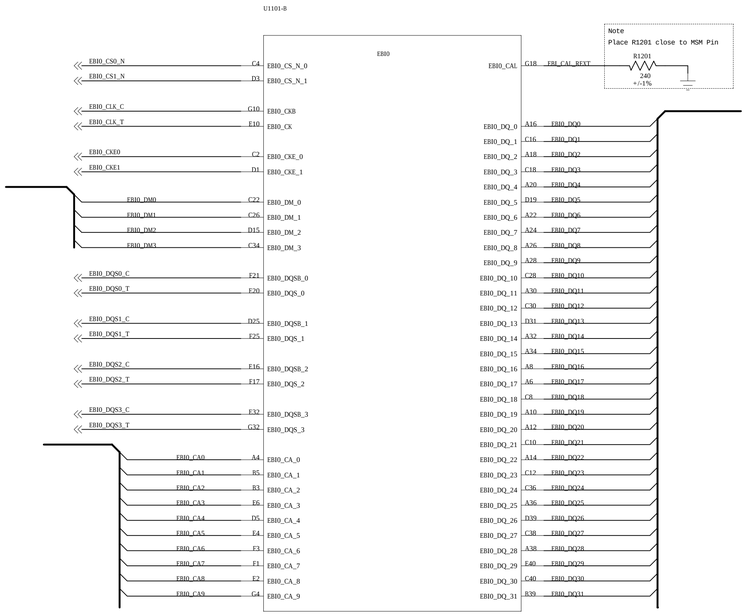

MSM8937 EBI

QUALCOMM Technologies, Inc.
5775 Morehouse Drive
San Diego, CA 92121-1714
U.S.A.

Title

Size | Name | Rev

Sheet

Date: | Sheet of

Note: Asterisks (*) indicate modem power management (MPM) wake-up pins

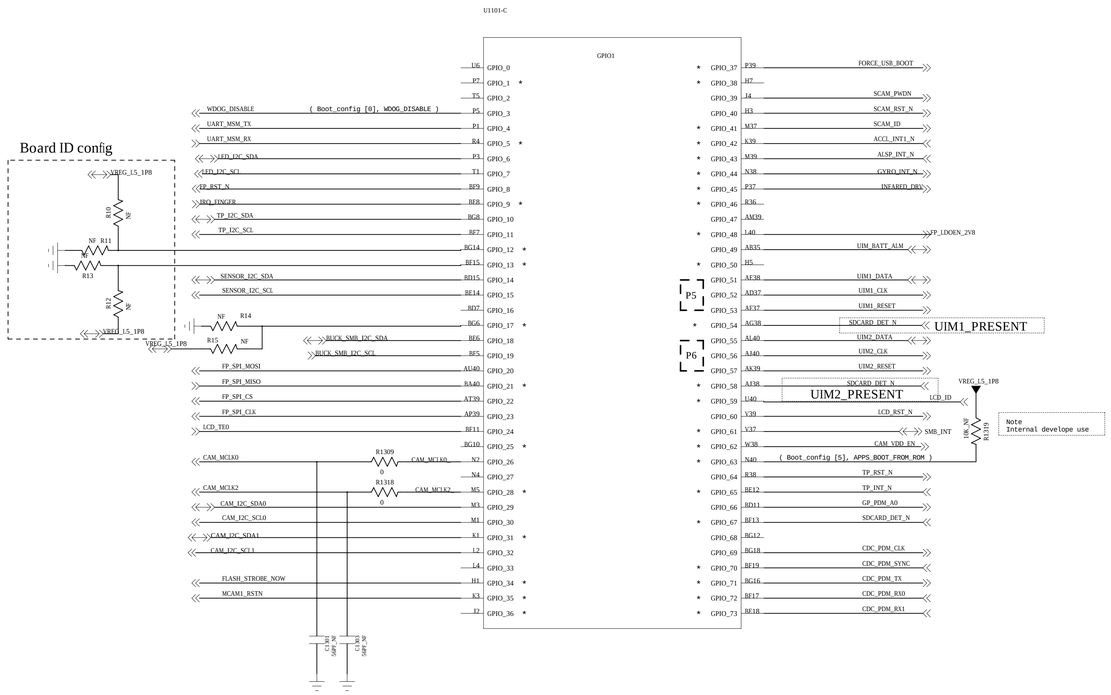

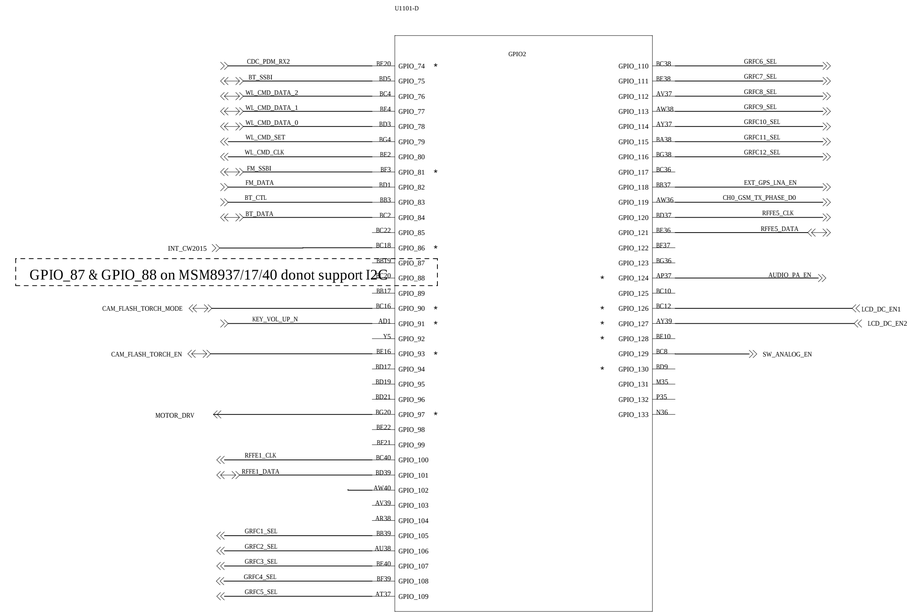

Note: Do not have pull-ups on the following GPIOs unless intend for boot or secure- boot related configurations:
GPIO_91, 107, 109

GPIO	BOOT_CONFIG
GPIO_3	BOOT_CONFIG[0]/WDOG_DISABLE
GPIO_111	BOOT_CONFIG[1]
GPIO_112	BOOT_CONFIG[2]
GPIO_88	BOOT_CONFIG[3]

BOOT_CONFIG[3:1]	BOOT_CONFIG
0b000	SDC1 -> SDC2 -> USB2.0
0b010	SDC1
0b100	SDC2-> SDC1

Default Boot Config (0b000) is SDC1(eMMC)

I2C PULL-UP RESISTORS

Note: Ensure SW sets these GPIOs (Sensor, CTP and Camera I2C bus) to inout pull down when the peripherals are powered off to eliminate leakage.

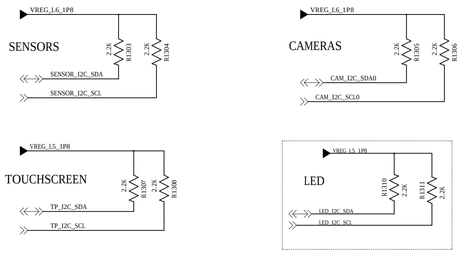

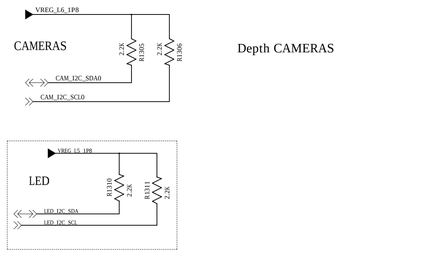

MSM8937 GPIO

QUALCOMM Technologies, Inc.
5775 Morehouse Drive
San Diego, CA 92121-1714
U.S.A.

Title

Size | Name | Rev

Date: | Sheet of

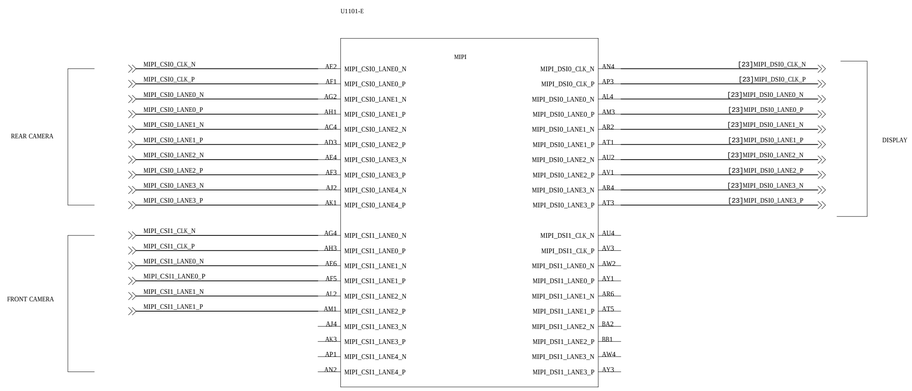

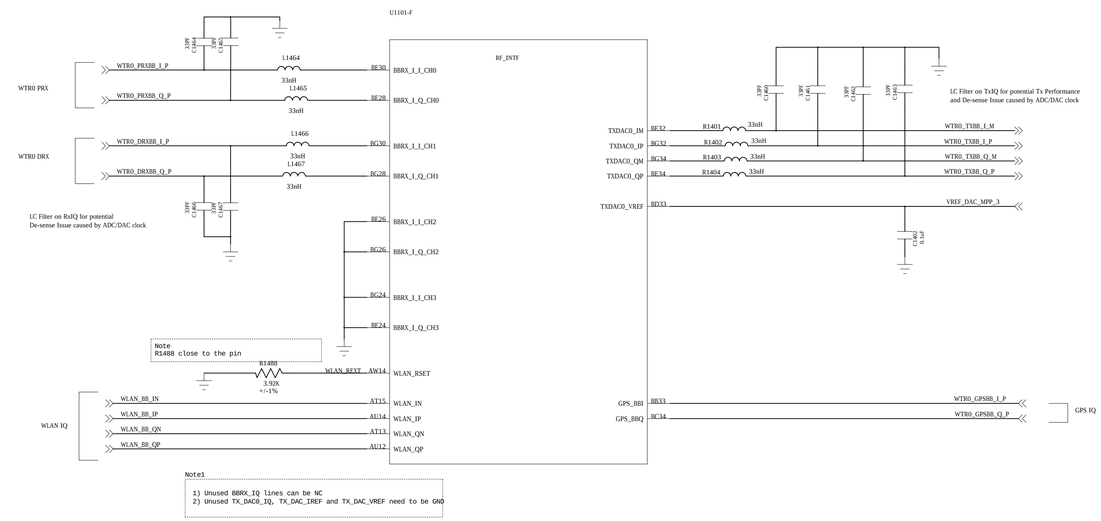

Note: If best EMI practices are followed for MIPI CSI/DSI signals, there is no need
for common mode choke filters. You may choose to have placeholders for
common mode depending upon your design constraints.
Extreme care must be taken that no stubs are created by doing so.

MSM8937 MIPI and RF Control

QUALCOMM Technologies, Inc.
5775 Morehouse Drive
San Diego, CA 92121-1714
U.S.A.

Title

Size | Name | Rev

Date: | Sheet | of

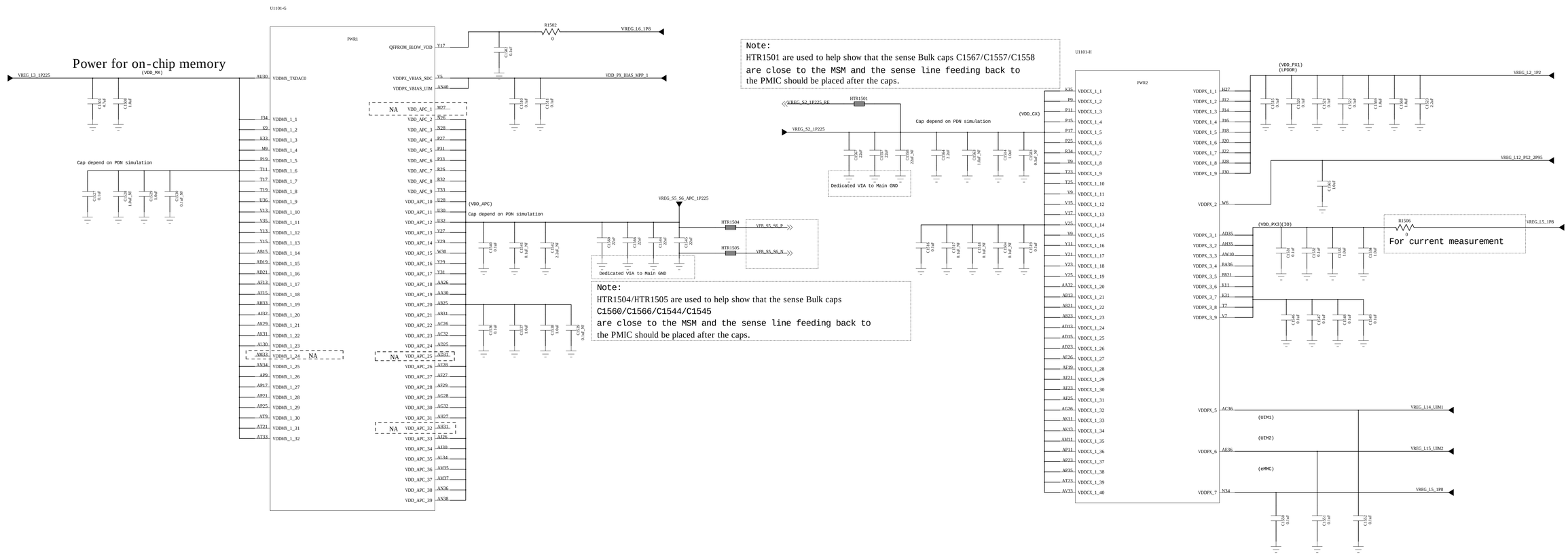

MSM8937 POWER1

QUALCOMM Technologies, Inc.
5775 Morehouse Drive
San Diego, CA 92121-1714
U.S.A.

Title

Size | Name | Rev

Date: | Sheet of

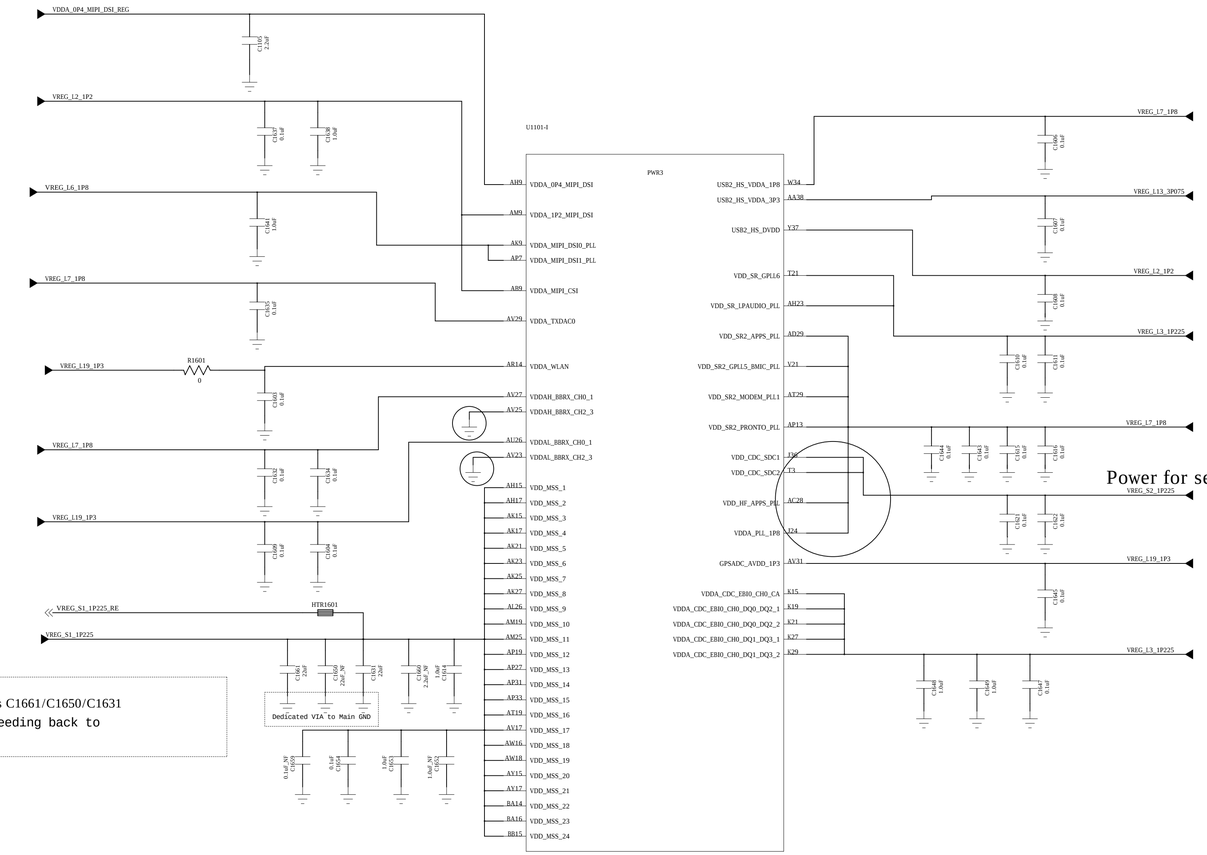

Power for secure digital calibration delay circuits

Note:
HTR1601 are used to help show that the sense Bulk caps C1661/C1650/C1631 are close to the MSM and the sense line feeding back to the PMIC should be placed after the caps.

MSM8937 POWER2

QUALCOMM Technologies, Inc.
5775 Morehouse Drive
San Diego, CA 92121-1714
U.S.A.

Title

Size | Sheet Name | Rev

Date: | Sheet of

U1101-L

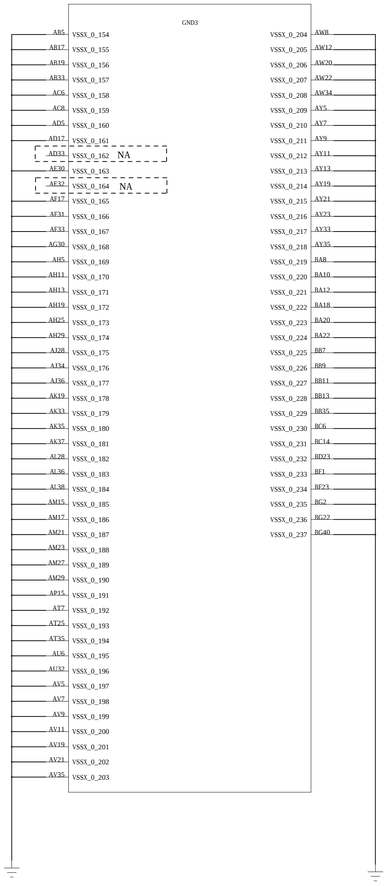

U1101-J

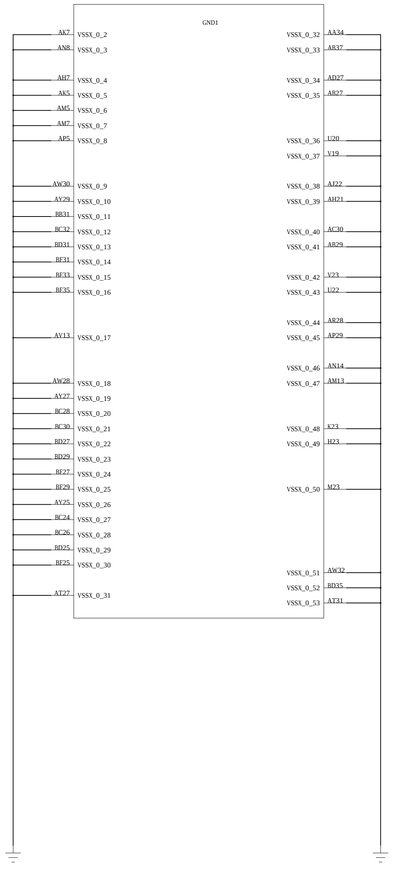

U1101-K

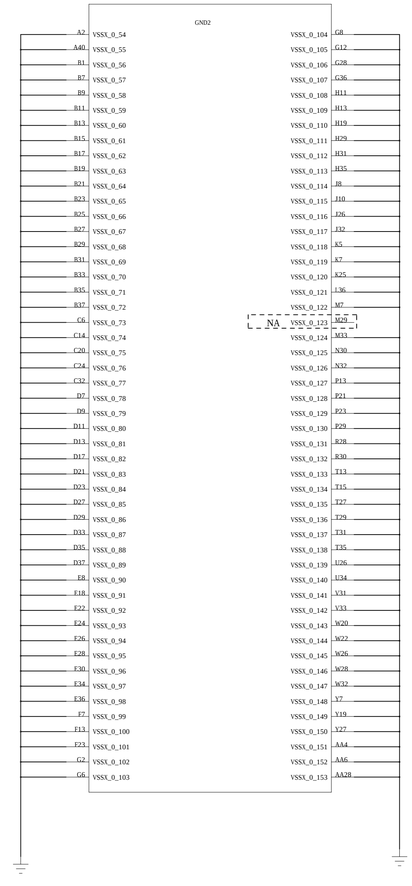

MSM8937 GND

QUALCOMM Technologies, Inc.
5775 Morehouse Drive
San Diego, CA 92121-1714
U.S.A.

Title

Size | Sheet Name | Rev

Date: | Sheet of

	MICRO/HYNIX	SAMSUNG
U1501.G3	ZQ1	NC
U1501.A7	RFU	RCLK

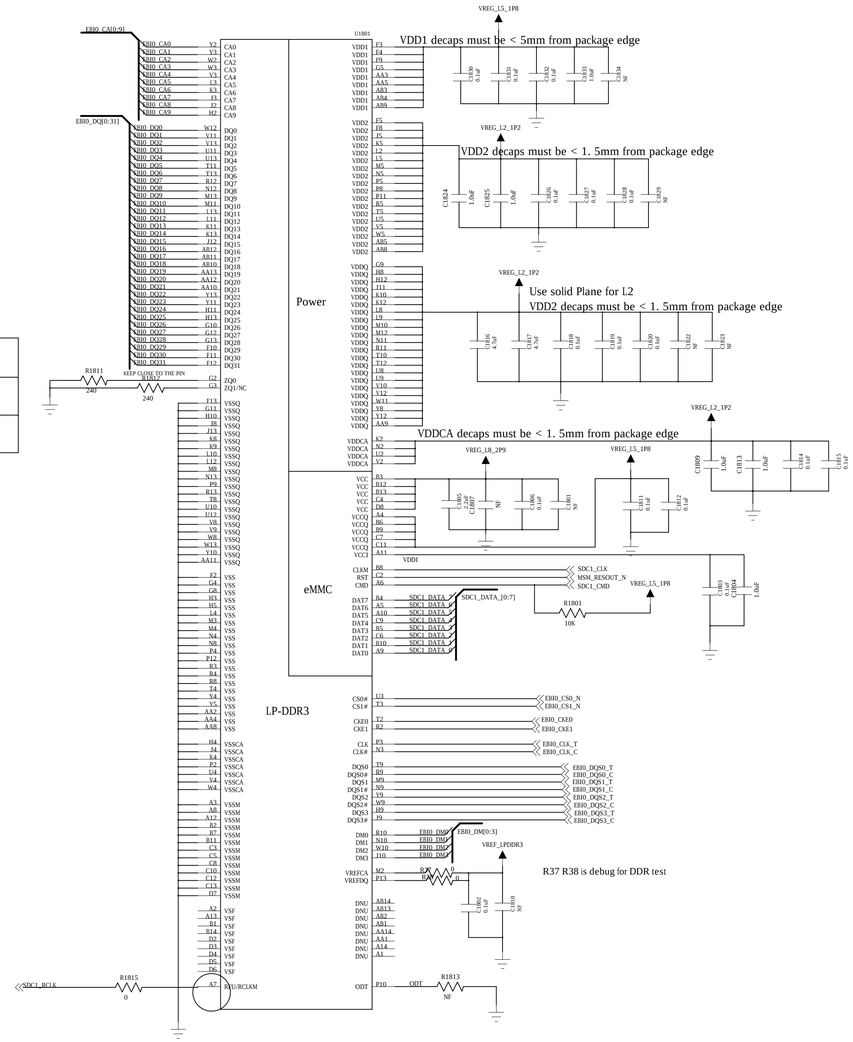

Note: Pull-up resistors on SDC1_DATA are PCB and eMMC vender dependent

MEMORY:LPDDR3+EMMC

QUALCOMM Technologies, Inc.
5775 Morehouse Drive
San Diego, CA 92121-1714
U.S.A.

Title

Size | Name | Rev

Date: | Sheet | of

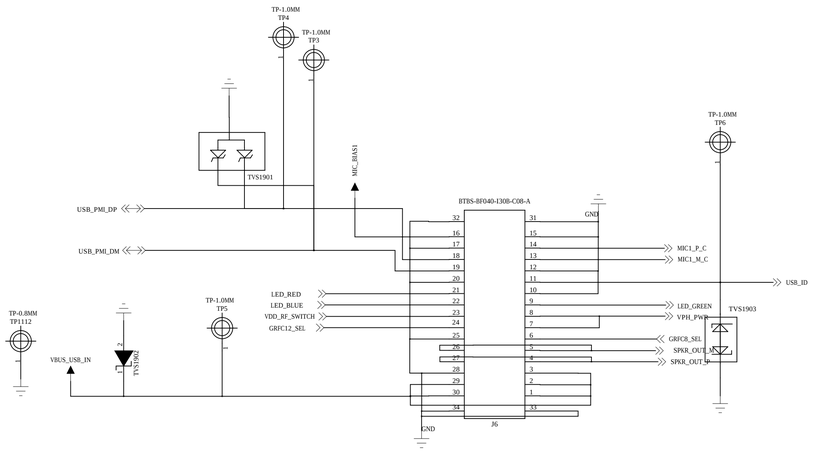

M-MIC+USB+RGB+SPK

connector 0812 change

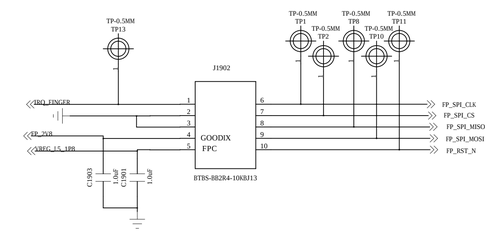

0511 update conector

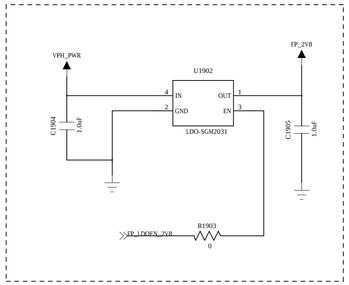

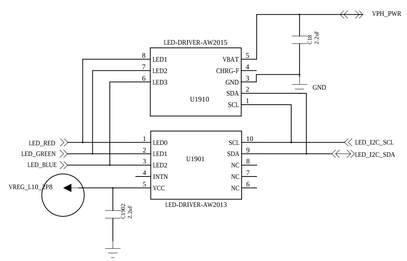

RGB

I2C Address	
Write	8B0x8A
Read	8B0x8B

Power on sequence: can be applied in any order

USB/SUB BOARD CONNECTOR

QUALCOMM Technologies, Inc.
5775 Morehouse Drive
San Diego, CA 92121-1714
U.S.A.

Title

Size | Name | Rev

Date: | Sheet | of

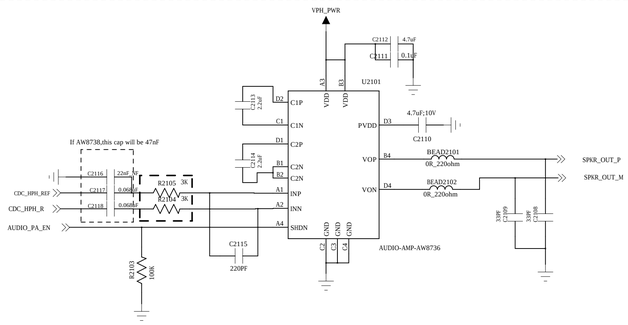

close to SPK

Motor

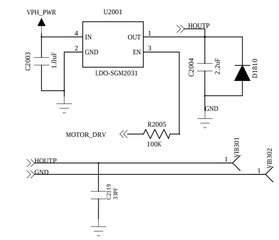

PRIMARY MIC

CLOSE TO CODEC

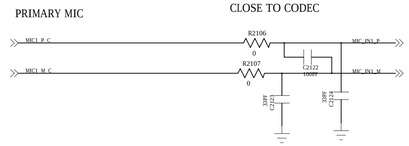

auxMIC

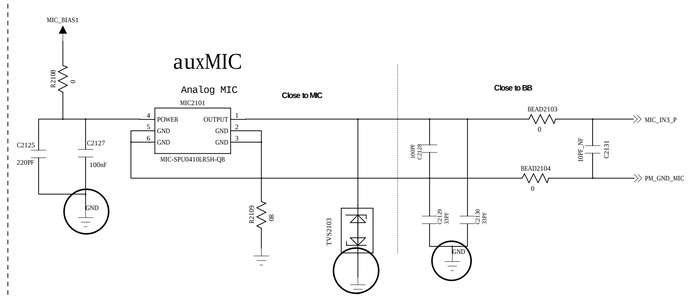

together then single via to main GND

RECEIVER

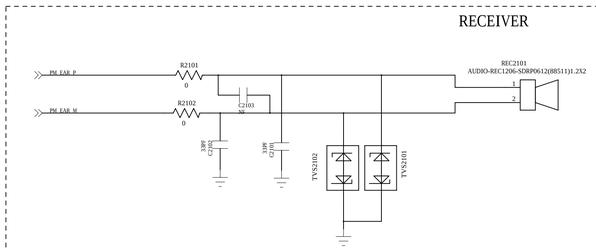

SECONDARY MIC/RECEIVER

QUALCOMM Technologies,Inc.
5775 Morehouse Drive
San Diego, CA 92121-1714
U.S.A.

Title

Size | Name | Rev

Date: | Sheet of

Note: Ferrite beads and their corresponding bypass capacitors on CDC_HPH_L, CDC_HPH_R and CDC_HPH_REF are needed to reduce noise generated by audio/FM concurrency

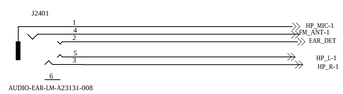

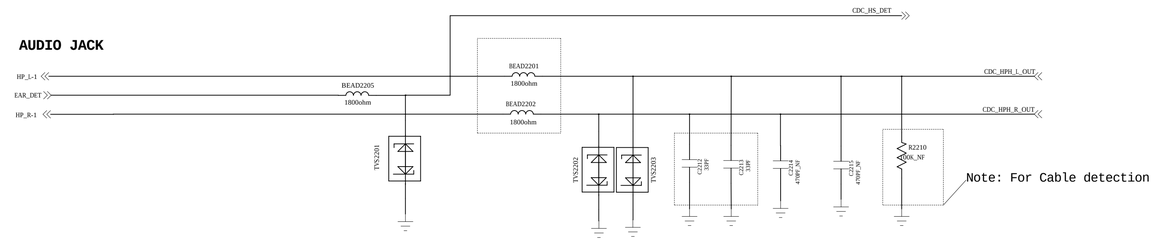

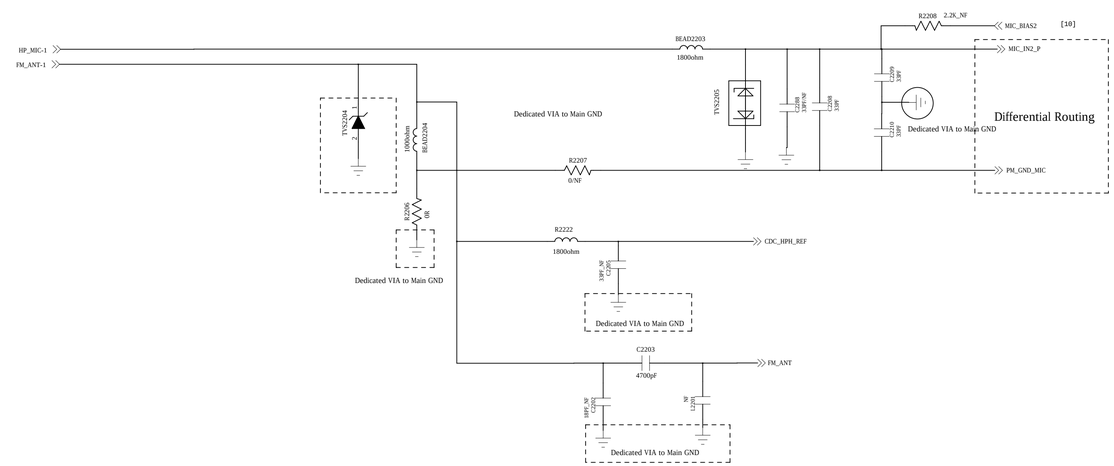

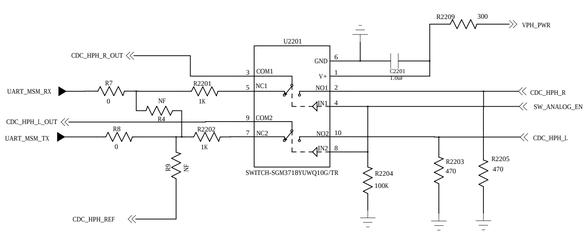

IN=0, COM Connected to NC;
IN=1, COM Connected to NO;

EARPHONE

QUALCOMM Technologies, Inc.
5775 Morehouse Drive
San Diego, CA 92121-1714
U.S.A.

Title

Size | Name | Rev

Date: | Sheet | of

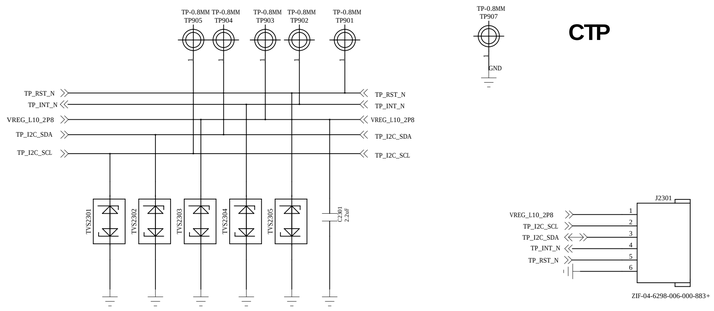

CTP

Power on sequence: Single Supply

FocalTech: FT5336

I2C Address		
Write	0x70	It can be changed by FACTORY.
Read	0x71	

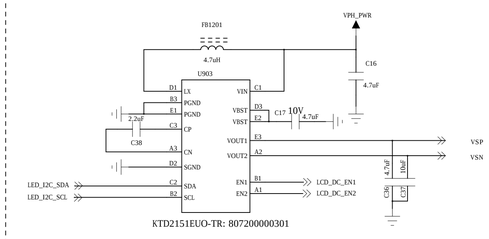

KTD2151& NT50358 powers ON with a default voltage of 5.0V
software can use without I2C

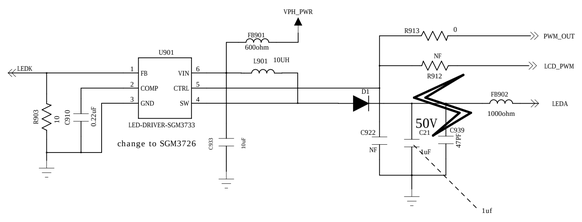

Backlight LED Driver

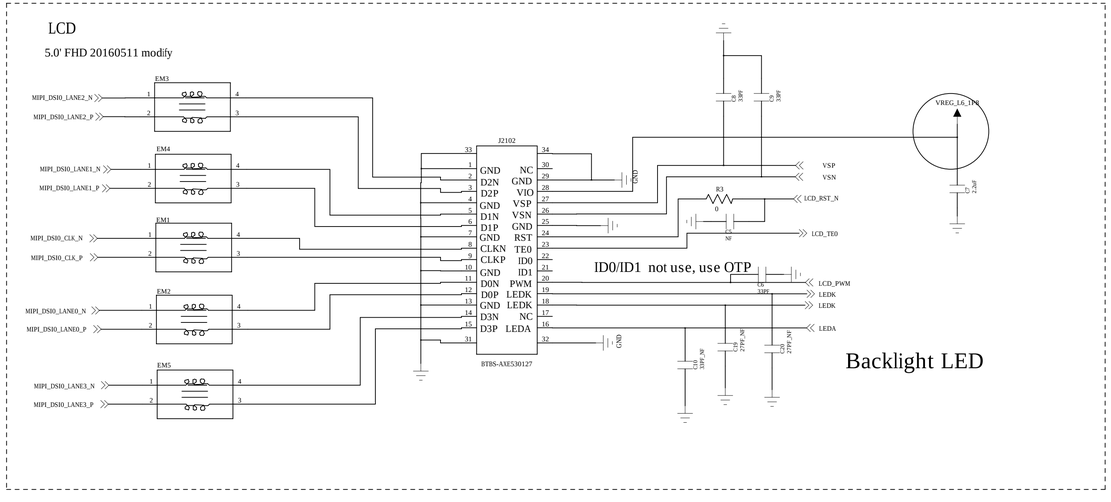

Note: If best EMI practices are followed for MIPI CSI/DSI signals, there is no need
for common mode choke filters. You may choose to have placeholders for
common mode depending upon your design constraints.
Extreme care must be taken that no stubs are created by doing so.

LCD interface and backlight

QUALCOMM Technologies, Inc.
5775 Morehouse Drive
San Diego, CA 92121-1714
U.S.A.

Title

Size | Name | Rev

Date: | Sheet | of

1	DGND	
2	MCN	
3	MCP	
4	DGND	
5	MDN0	
6	MDP0	
7	DGND	
8	MDN1	
9	MDP1	
10	DGND	
11	AVDD	2.8V
12	AGND	
13	DGND	
14	DGND	
15	DVDD	1.2V
16	DGND	
17	DOVDD	1.8V
18	DGND	
19	SDA	
20	SCL	
21	RESET	
22	DGND	
23	MCLK	
24	DGND	

FRONT_camera

0511 update conector

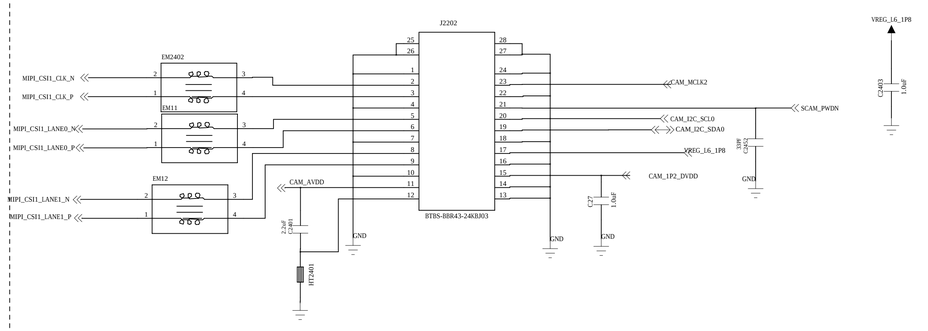

Main Camera / Sub Camera share power domain design
should double check the voltage level is compatible

FLASH LED DRIVER

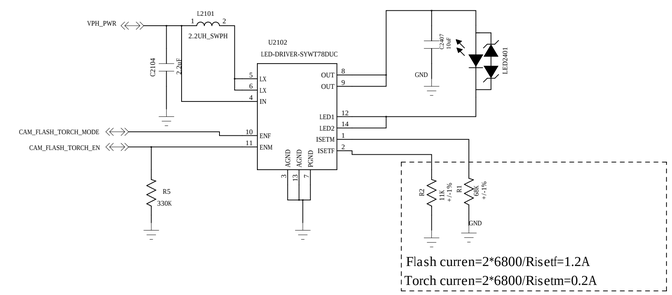

	PIN	
1	MCLK	
2	DGND	
3	MDP0	
4	MDN0	
5	DGND	
6	MDN1	
7	MDP1	
8	DGND	
9	MCN	
10	MCP	
11	DGND	
12	AF_Power	2.8V
13	AF_GND	
14	AVDD	2.8V
15	AGND	
16	DVDD	1.2V
17	DOVDD	1.8V
18	DGND	
19	SIO_C	
20	SIO_D	
21	RESET	
22	VPP	NC
23	AF_EN	NC
24	DGND	
25	MDP3	
26	MDN3	
27	DGND	
28	MDN2	
29	MDP2	
30	DGND	

0711 update conector

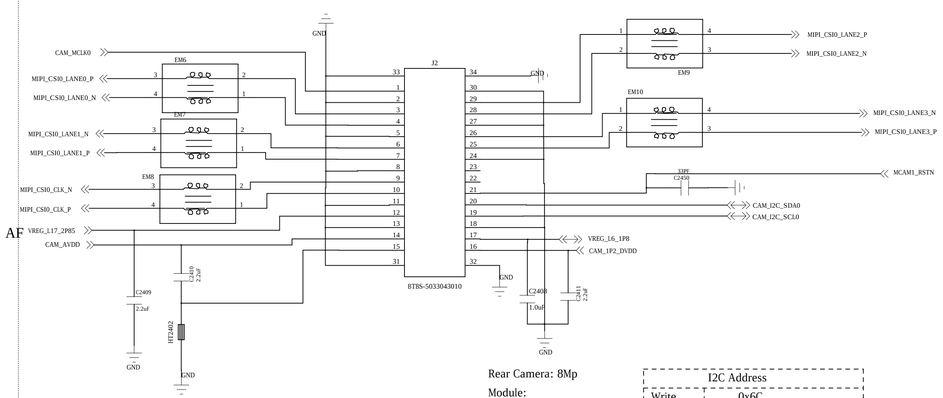

Rear Camera: 8Mp

Module:

Sensor: OV8865

I2C Address	
Write	0x6C
Read	0x6D

Power on sequence: L6(DOVDD) must before L17(AVDD)

Main Camera

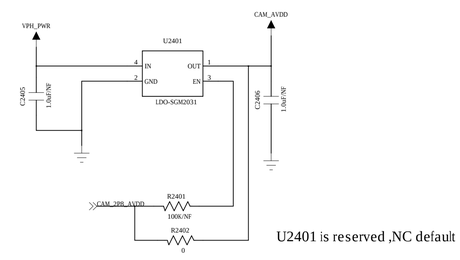

U2401 is reserved ,NC default

Main/Slave Camera and Flash

QUALCOMM Technologies, Inc.
5775 Morehouse Drive
San Diego, CA 92121-1714
U.S.A.

Title

Size | Name | Rev

Date: | Sheet of

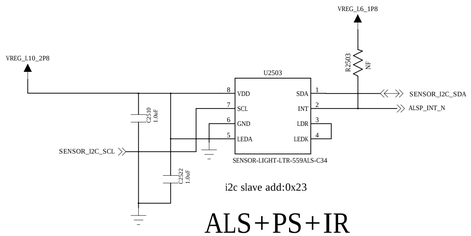

i2c slave add:0x23

ALS+PS+IR

G-Sensor

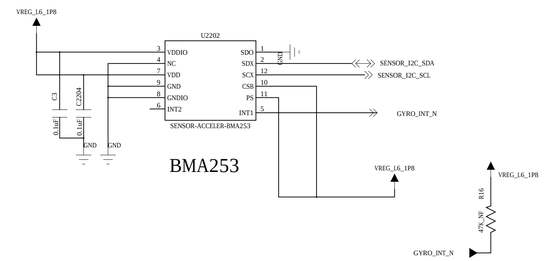

BMA253

Gyroscope

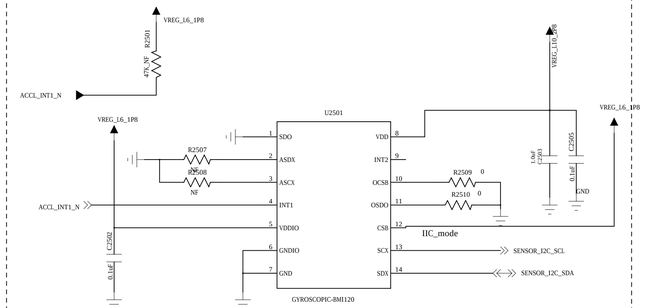

BMI160

SD0=0 7b1101000 0x68

SD0=1 7b1101001 0x69

LSM6DS3

SD0=0 7b1101010 0x6A

SD0=1 7b1101011 0x6B

Power on sequence: L6/L17 can be applied in any order

M-Sensor

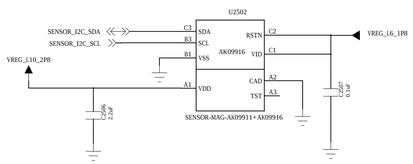

AKM: AK09911

I2C Address@CAD=0	
Write	0x18
Read	0x19

I2C Address@CAD=1	
Write	0x1A
Read	0x1B

Power on sequence: L6/L17 can be applied in any order

INFARED LEDS

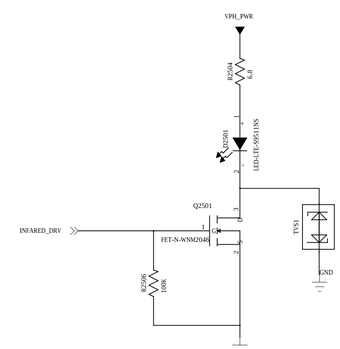

SENSORS

QUALCOMM Technologies, Inc.
5775 Morehouse Drive
San Diego, CA 92121-1714
U.S.A.

Title

Size | Name | Rev

Date: | Sheet of

Vout=3.0V,I-lim=1A

SIM1

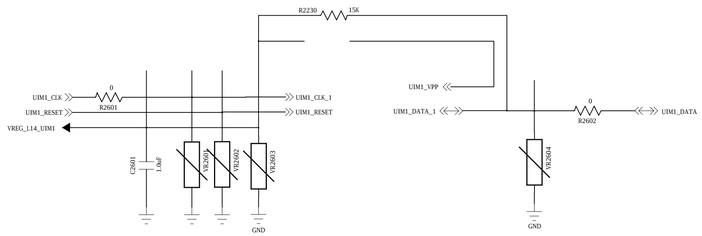

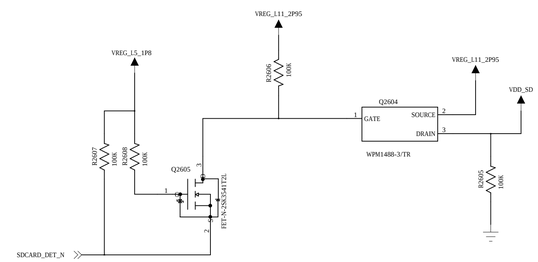

SIM2

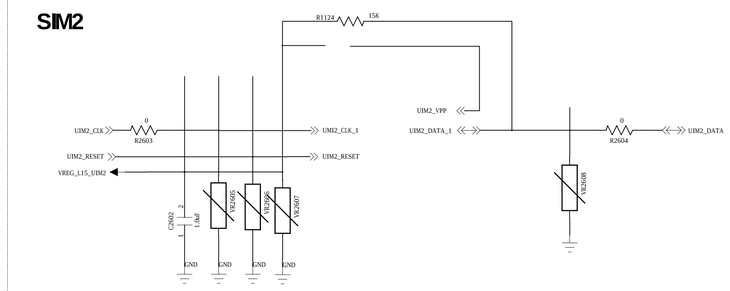

SD CARD

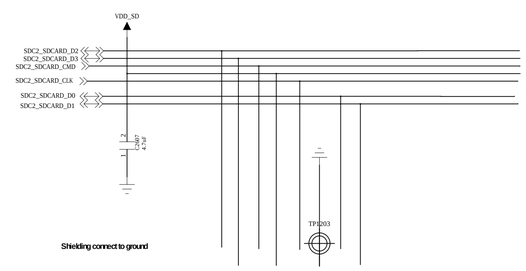

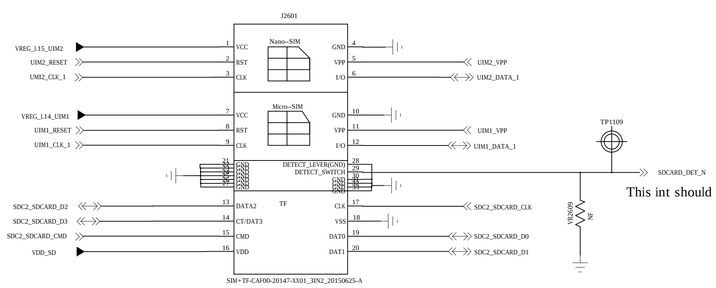

This int should give to GPIO54/GPIO58/GPIO67

SIM/TF card

QUALCOMM Technologies, Inc.
5775 Morehouse Drive
San Diego, CA 92121-1714
U.S.A.

Title

Size | Name | Rev

Date: | Sheet | of

Signal	Description
KEY_VOL_UP_N	Volume Up
PM_RESIN_N1	Volume Down
KYPD_PWR_N1	PWER_ON
PM_RESIN_N1 + KYPD_PWR_N1	Hardware Reset

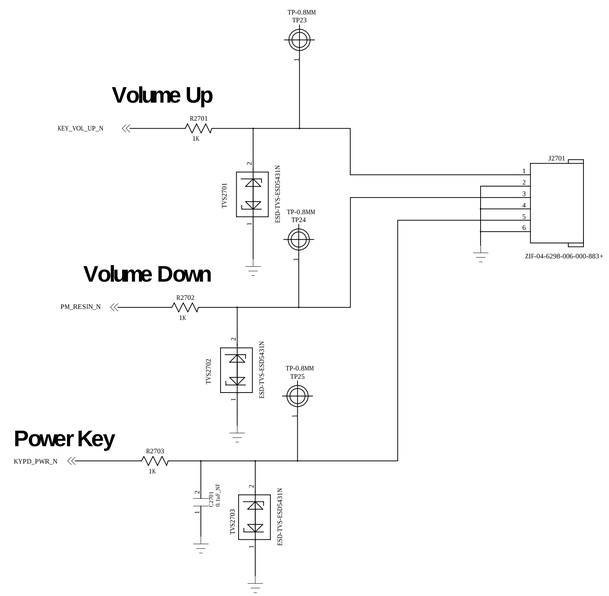

Keypad/LED/Status indicator

QUALCOMM Technologies, Inc.
5775 Morehouse Drive
San Diego, CA 92121-1714
U.S.A.

Title

Size | Sheet Name | Rev

Date: | Sheet of

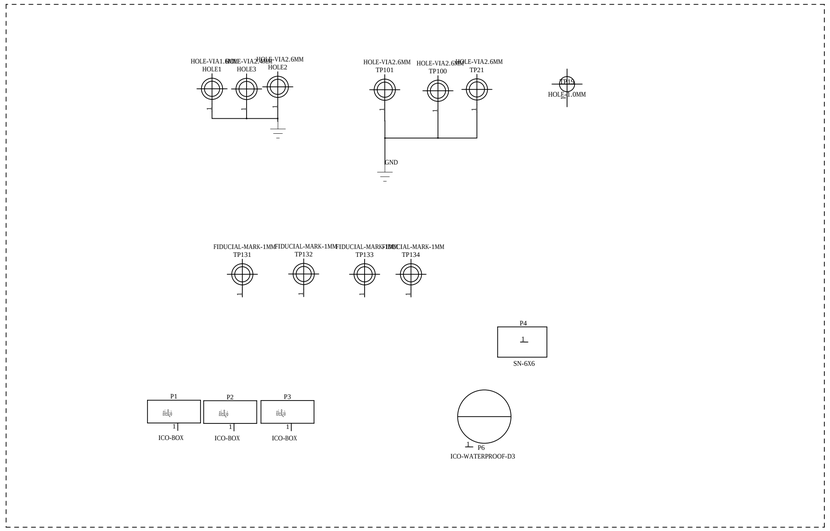

Test Point

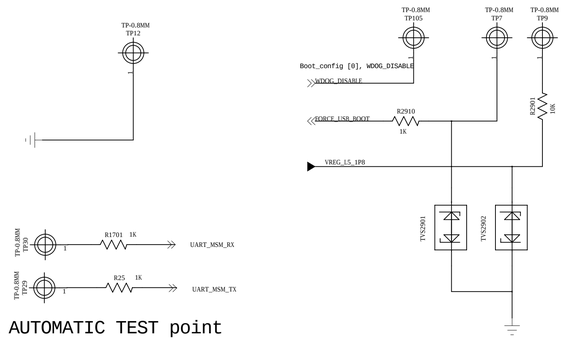

PCBA AUTOMATIC TEST point

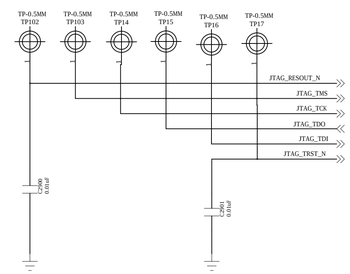

JTAG CONNECTOR

Test Point/Shields

QUALCOMM Technologies, Inc.
5775 Morehouse Drive
San Diego, CA 92121-1714
U.S.A.

Title

Size | Sheet Name | Rev

Date: | Sheet of

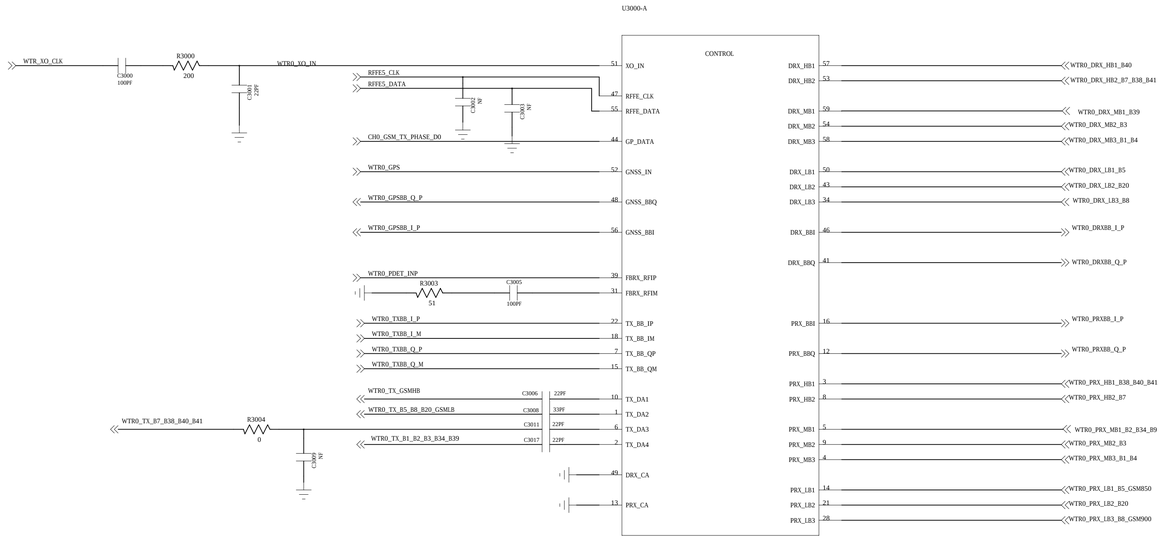

Note:RX ports have DC at the pin,
so it need DC block,please make sure
there is no DC short to other voltages and GND

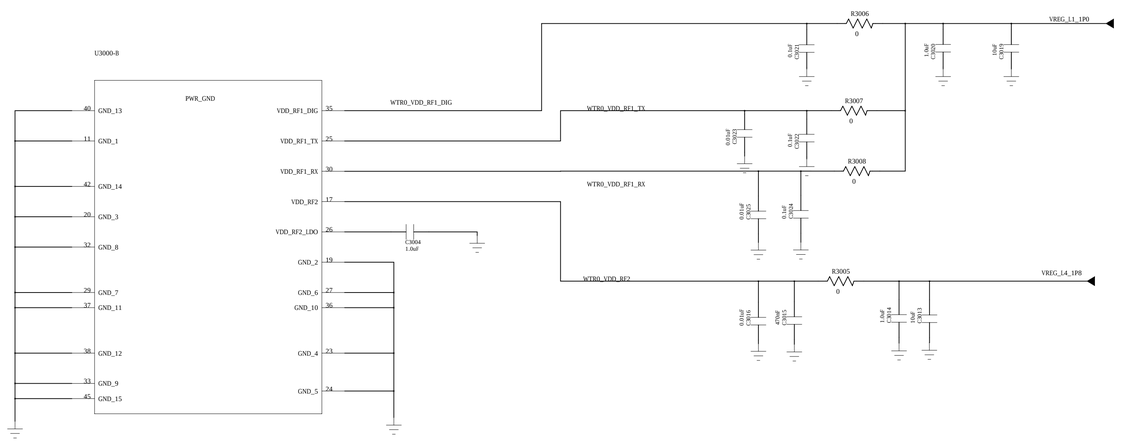

WTR 2955

QUALCOMM Technologies, Inc.
5775 Morehouse Drive
San Diego, CA 92121-1714
U.S.A.

Title

Size | Name | Rev

Sheet

Date: | Sheet of

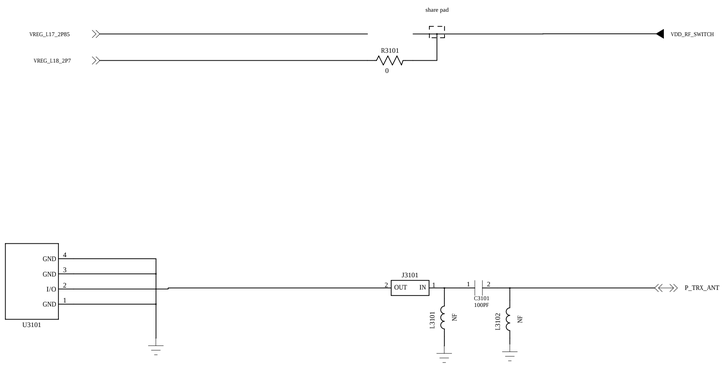

Title

Size | Sheet Name | Rev

Date: | Sheet of

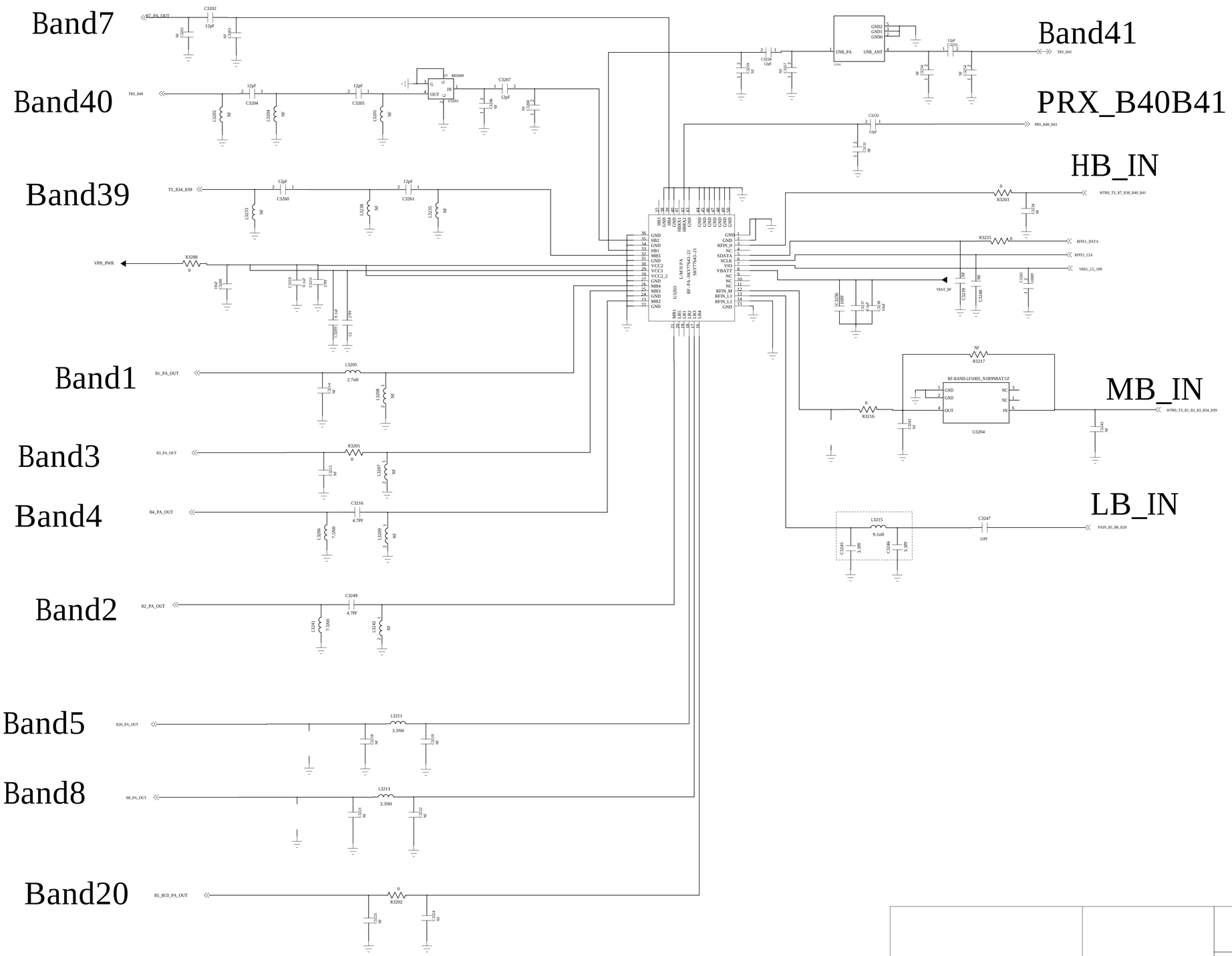

Title

Size | Name | Rev

Date: | Sheet | of

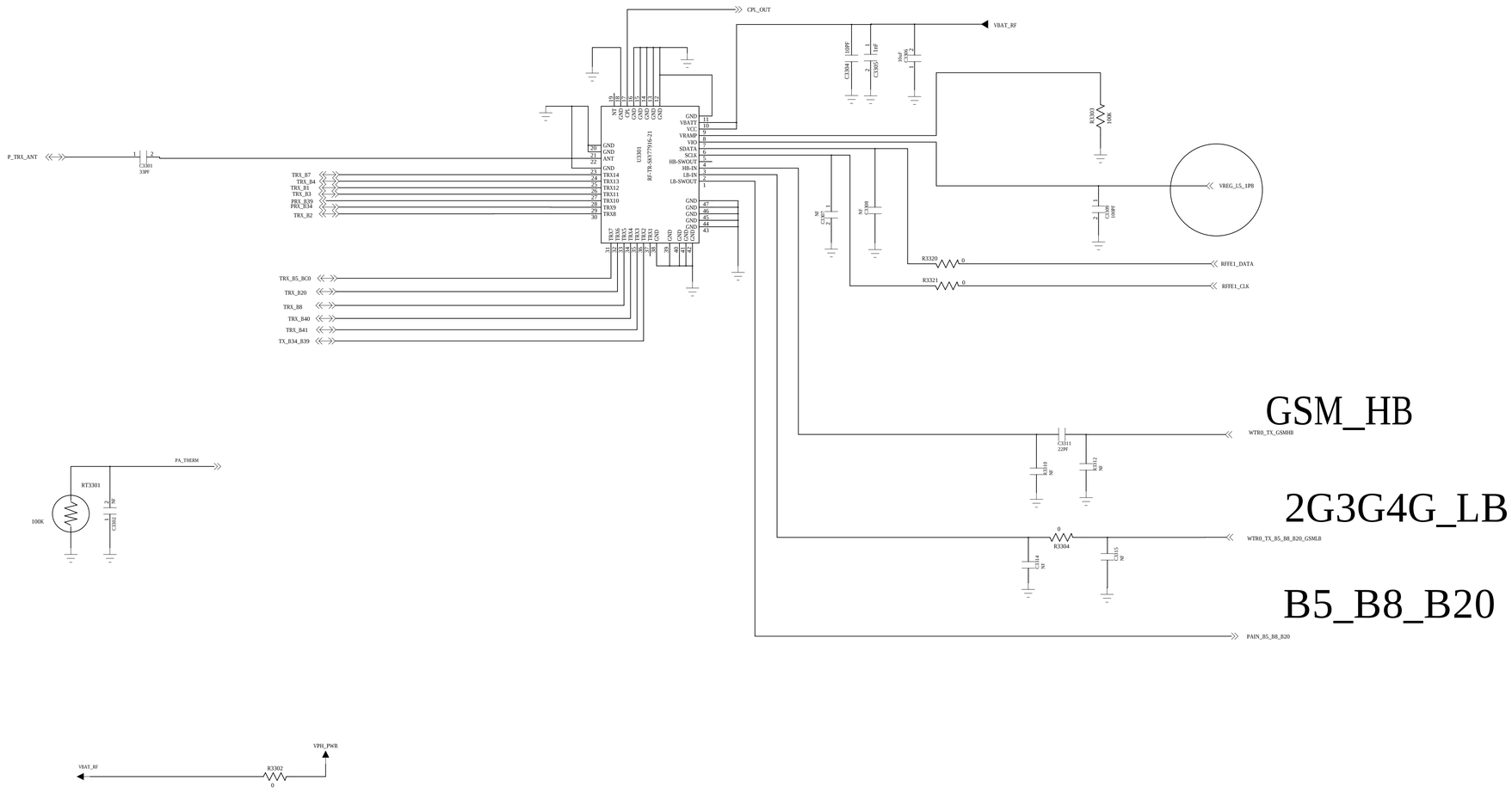

GSM_HB

2G3G4G_LB

B5_B8_B20

Title

Size | Name | Rev

Date: | Sheet of

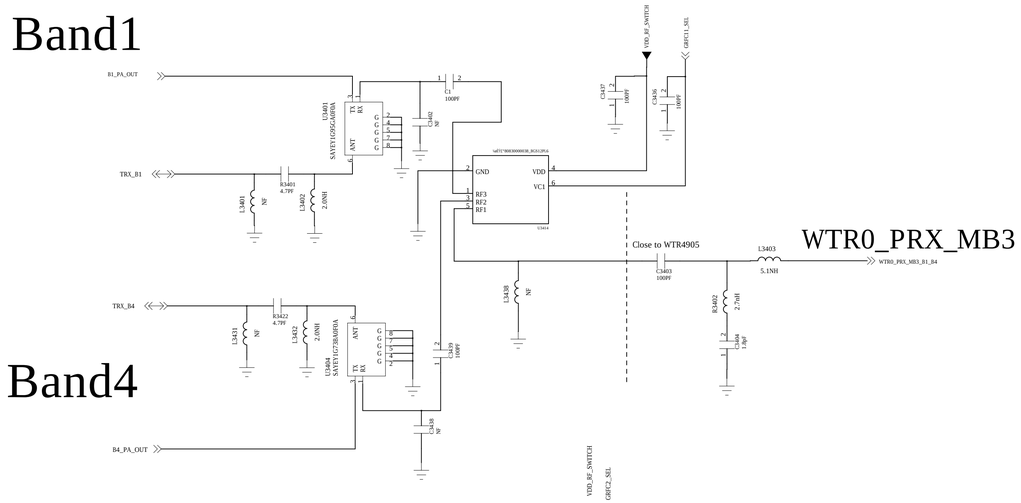

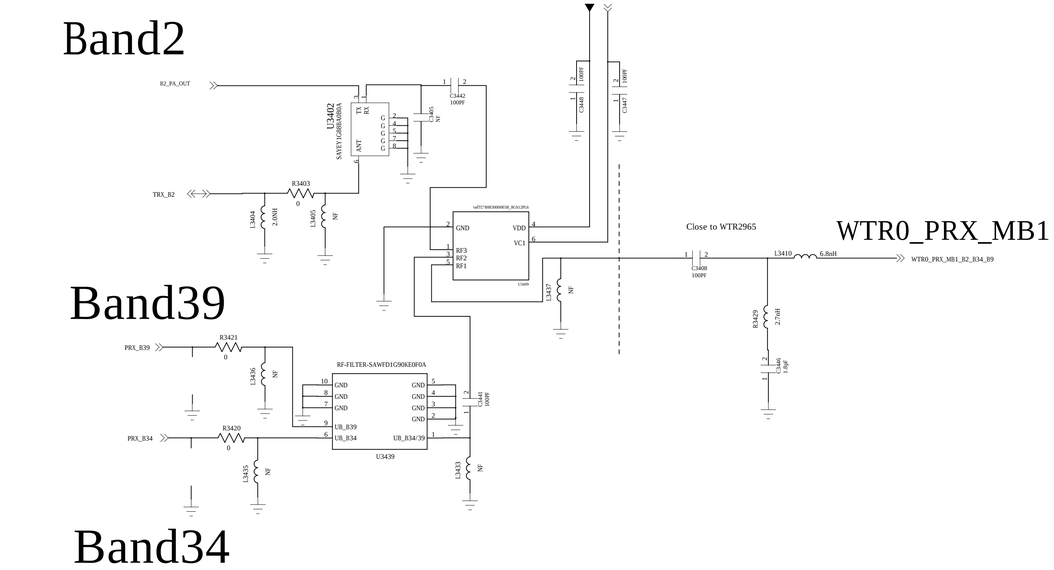

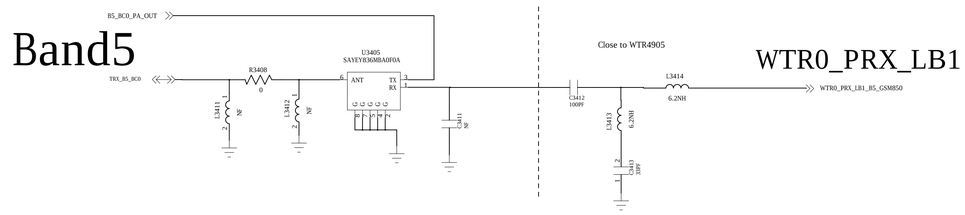

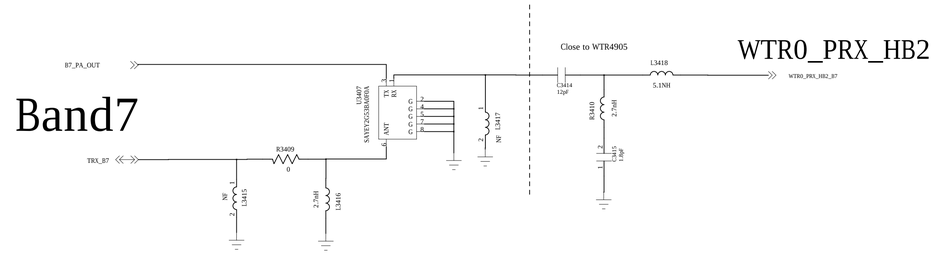

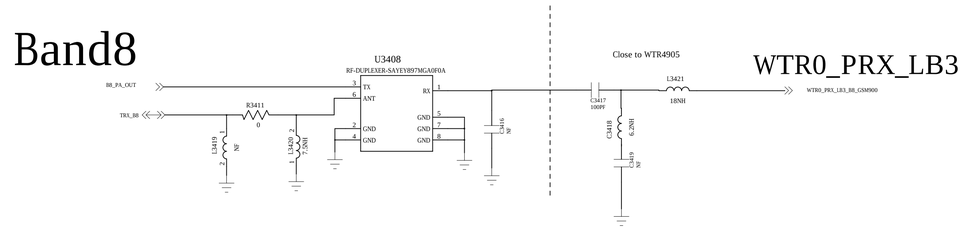

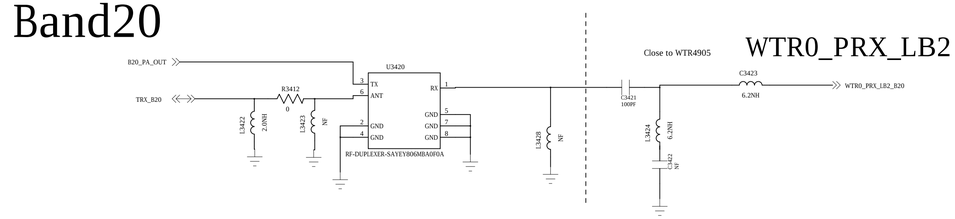

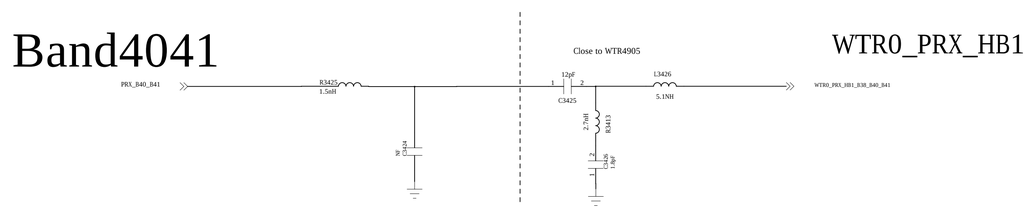

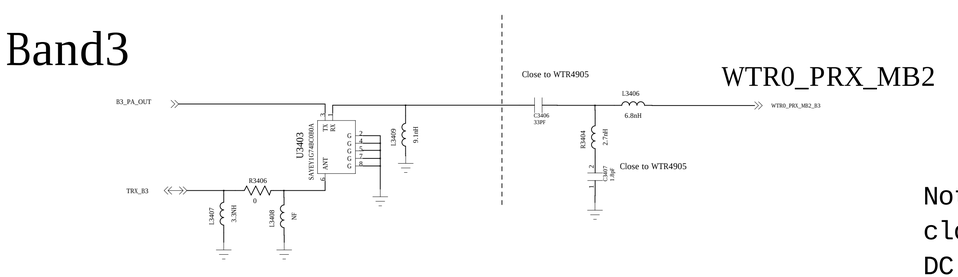

Note:The matching need
close to WTR, RX ports have
DC at the pin, so it need DC block,

Title
Size Name Rev
Date: Sheet of

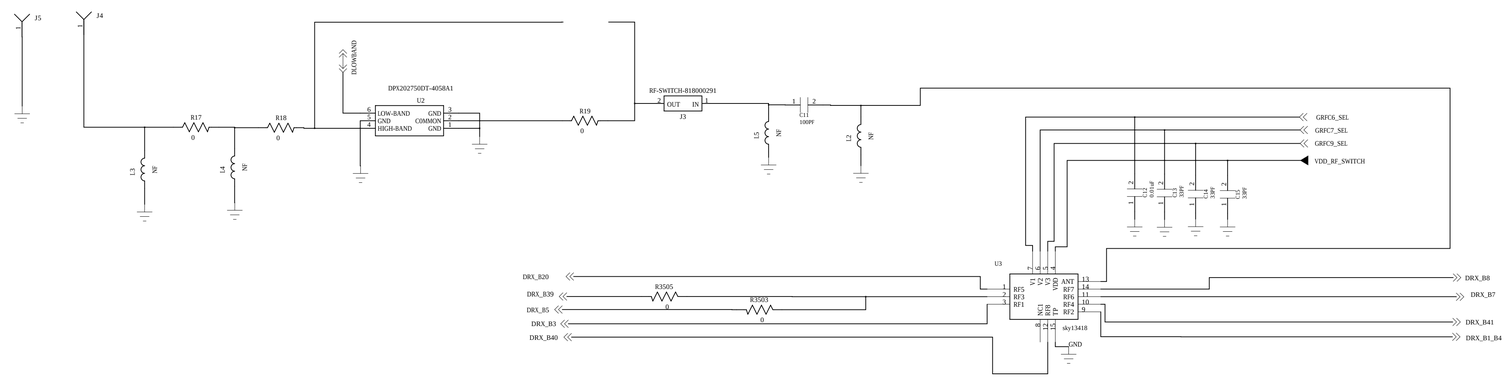

Title

Size: Sheet Name Rev

Date: Sheet of

Band1_4

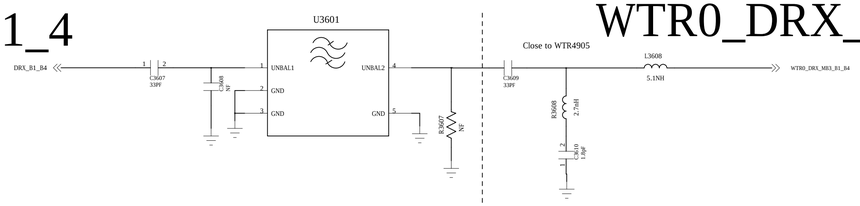

WTR0_DRX_MB3

Band3

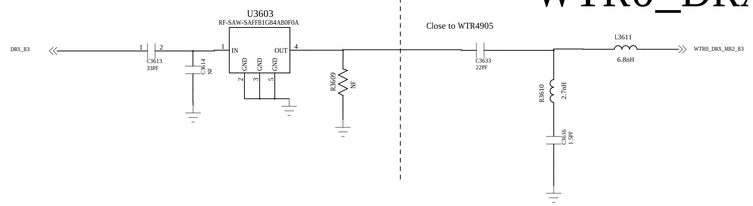

WTR0_DRX_MB2

Band5

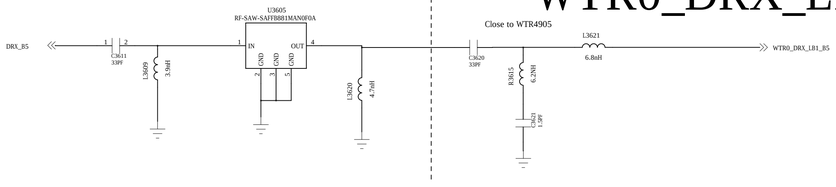

WTR0_DRX_LB1

Band7

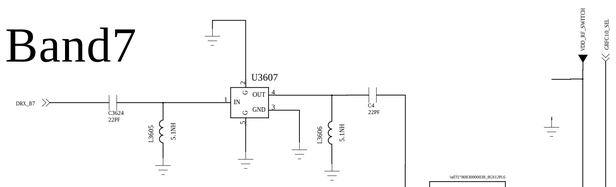

Band41

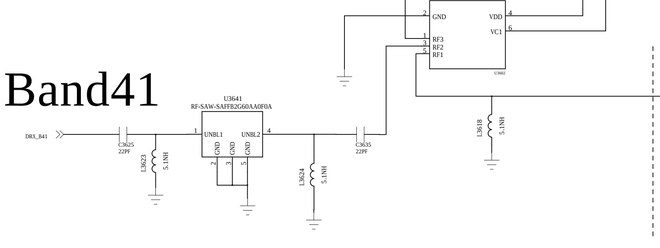

WTR0_DRX_HB2

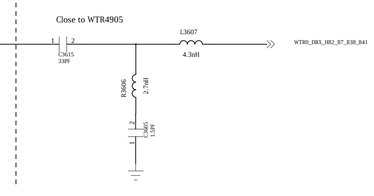

Band8

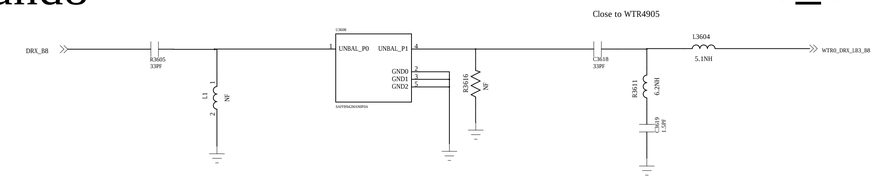

WTR0_DRX_LB3

Band20

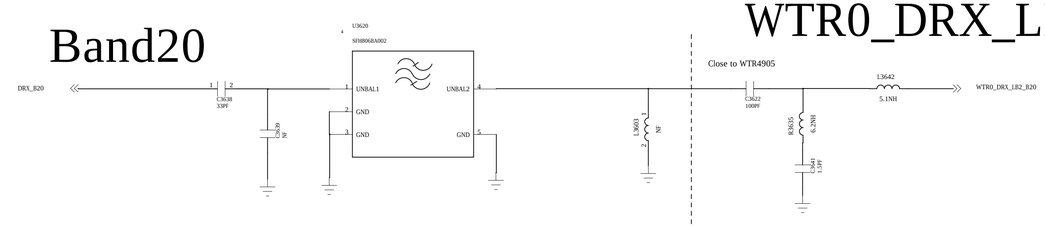

WTR0_DRX_LB2

Band39

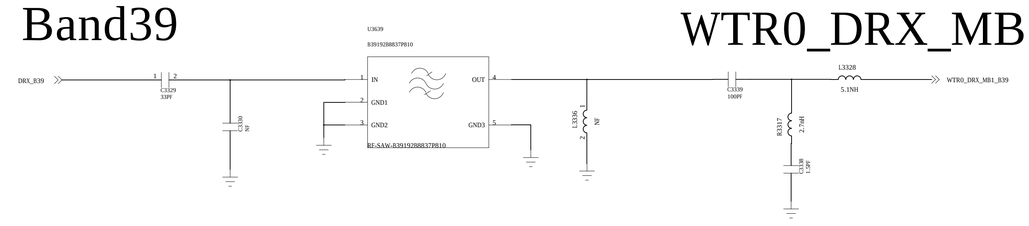

WTR0_DRX_MB1

Band40

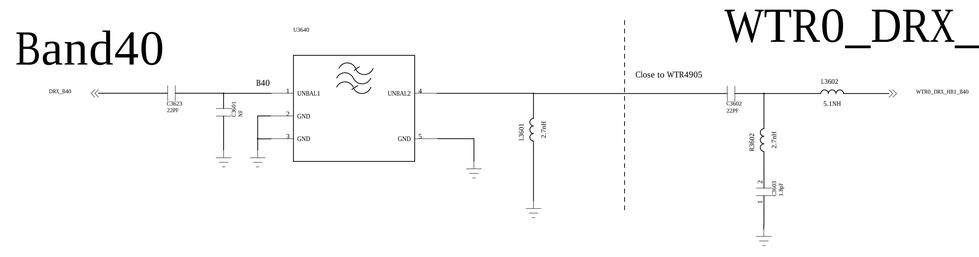

WTR0_DRX_HB1

Note:The matching need
close to WTR, RX ports have
DC at the pin, so it need DC block,

Title
Size
Sheet Name
Rev
Date:
Sheet of

SPDT

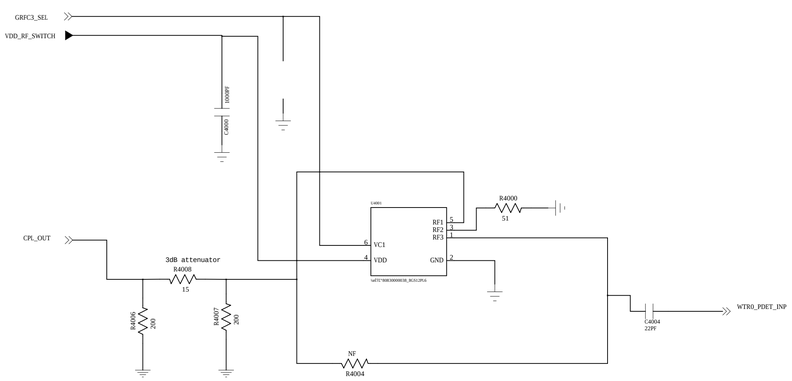

QUALCOMM Technologies, Inc.
5775 Morehouse Drive
San Diego, CA 92121-1714
U.S.A.

Title

Size | Name | Rev

Date: | Sheet of

Note: Use a signle low impedance power plane/fill VPA for all ET PA VCC1/VCC2.

Refer to 80-NA681-91 rev.B or later revisions for more layout details.

Title

Size | Name | Rev

Date: | Sheet | of

WCN

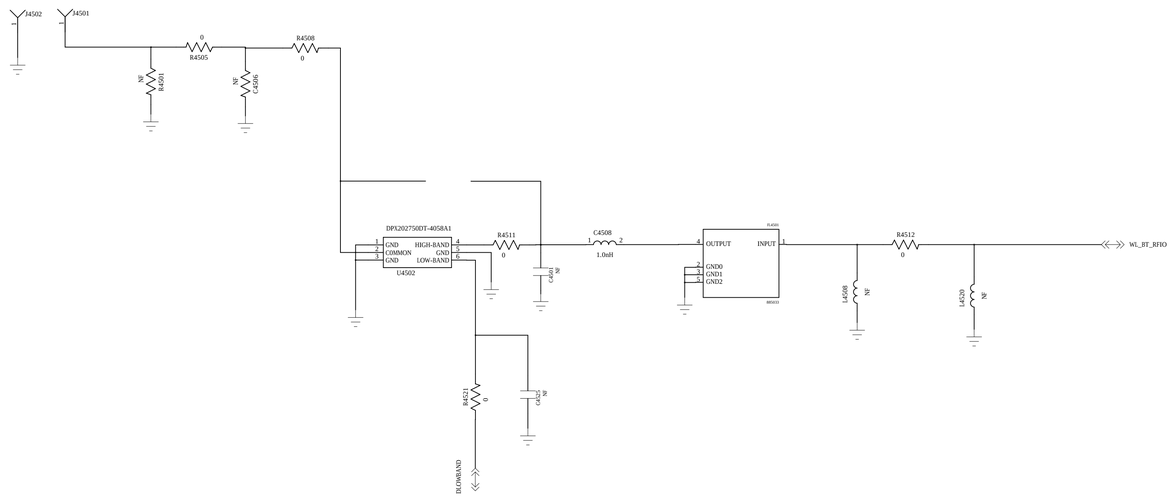

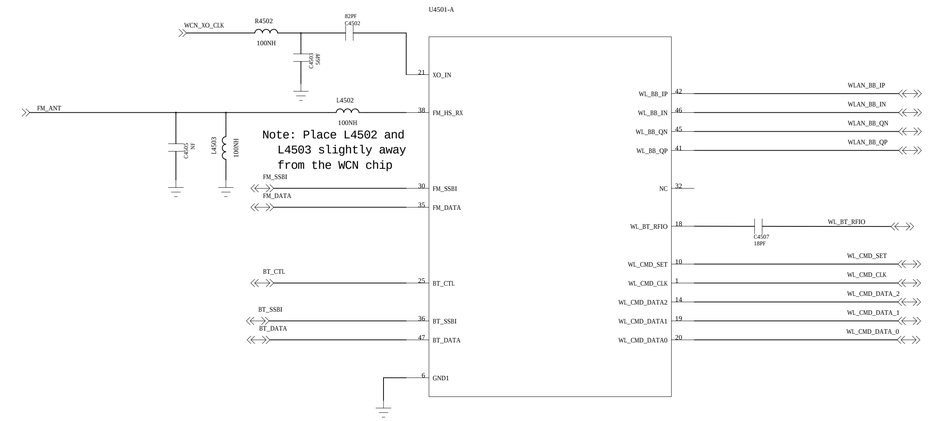

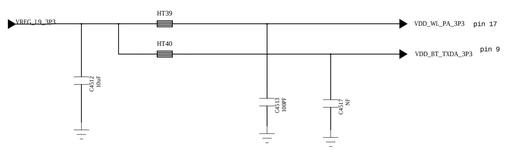

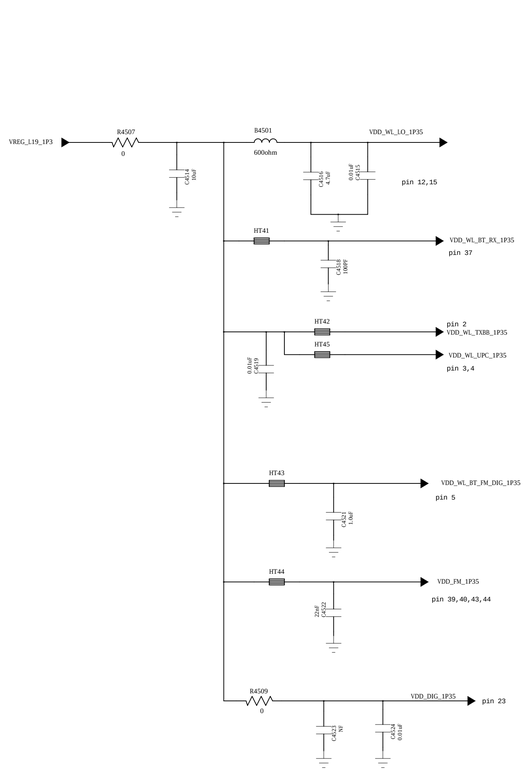

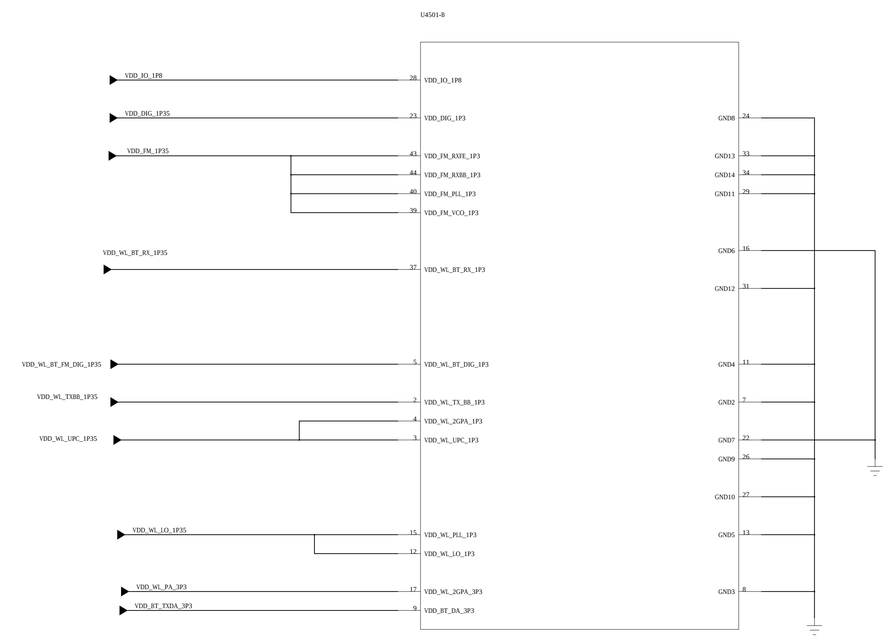

QUALCOMM Incorporated
6775 Morehouse Drive
San Diego, CA 92121-1714
U.S.A.

Title

Size | Name | Rev

Date: | Sheet of

GPS

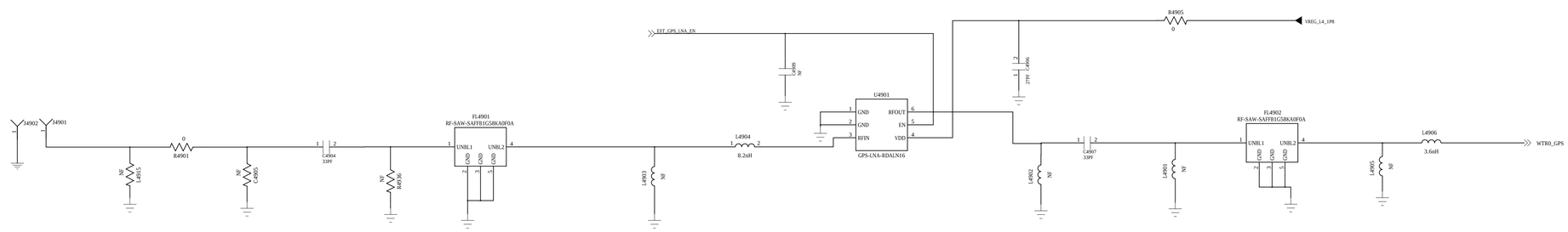

GPS

Title

Size | Name | Rev

Date: | Sheet | of